T3DF series AC servo driver instruction manual (V2.2 version)

T3DF (universal servo)

Product introduction

T3DF series digital AC servo drives are general-purpose AC servo drive products with domestic leading level. This series of products adopts advanced full digital control and AC motor vector control theory, with excellent system performance and high reliability, and is widely used in servo shaft drive of food processing, packaging machinery, textile machinery and other related automation industrial machinery.

Product Features

T3DF series fully sealed design, good protection and strong anti-interference ability

The compact design of T3DF series saves installation space

Integrate speed control, position control and torque control

Can drive various types of permanent magnet synchronous servo motors

Excellent low-speed torque characteristics and industry-leading dynamic acceleration and deceleration performance

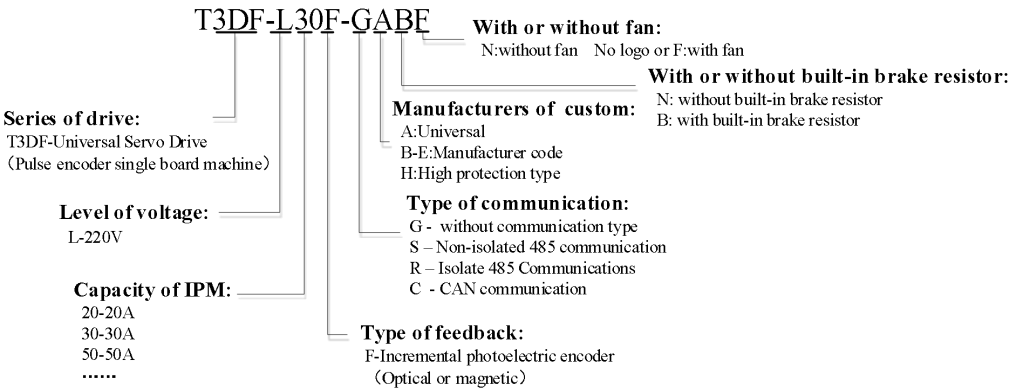

Precautions of Safety

Before the product is stored, installed, wired, operated, inspected or maintained, the user must be familiar with and observe the following important items to ensure the safe and correct use of this product.

⚠ Danger	Incorrect operation may cause danger and result in personal injury or death.
⚠ Notice	Incorrect operation can be dangerous, cause personal injury, and possibly damage the equipment.
⊘ Prohibit	Actions are strictly prohibited, otherwise the equipment will be damaged or unusable.

1.Use occasions

⚠Danger
● It is forbidden to use the product in places with moisture, corrosive gas and flammable gas. Otherwise, electric shock or fire may result. ● Do not use the product in places with direct sunlight, dust, salt and metal powder. ● It is forbidden to use the product in places with water, oil and medicine dripping.

2.Wiring

⚠Danger
● Please ground the ground terminal reliably. Poor grounding may cause electric shock or fire. ● Do not connect the 220V driver power supply to the 380V power supply, otherwise it will cause equipment damage, electric shock or fire. ● Do not connect the U, V, W motor output terminals to the three-phase power supply, otherwise it will cause personal injury or fire. ● The U, V, W motor output terminals must be connected to the driver wiring terminals U, V, W in one-to-one correspondence, otherwise the motor may overspeed and cause equipment loss and casualties. ● Please fasten the power supply and motor output terminals, otherwise it may cause fire. ● For wiring, please refer to the wire selection for wiring, otherwise it may cause a fire.

3.Operation

⚠Notice
● Before the mechanical equipment starts to run, it must be matched with the appropriate parameter settings. Failure to adjust to the proper setting may result in loss of control or malfunction of the mechanical equipment. ● Before starting operation, please confirm whether the emergency switch can be activated at any time to stop. ● Please test whether the servo motor runs normally without load first, and then connect the load to avoid unnecessary losses. ● Do not turn on or turn off the power frequently, otherwise it will cause overheating inside the drive.

4.Run

Prohibit
● When the motor is running, it is forbidden to touch any rotating parts, otherwise it will cause personal injury or death. ● When the device is running, it is forbidden to touch the driver and motor, otherwise it will cause electric shock or burns. ● When the device is running, it is forbidden to move the connecting cable, otherwise it will cause personal injury or damage to the device.

5.Maintenance and Inspection

Prohibit
● Do not touch the inside of the driver and its motor, otherwise it will cause electric shock. ● When the power is turned on, it is forbidden to disassemble the drive panel, otherwise it will cause electric shock. ● Do not touch the terminals within 5 minutes after the power is turned off, otherwise the residual high voltage may cause electric shock. ● Do not change the wiring when the power is turned on, otherwise it will cause electric shock. ● It is forbidden to disassemble the servo motor, otherwise it will cause electric shock.

6.Scope of use

⚠Notice
● The products involved in this manual are for general industrial purposes, please do not use them on devices that may directly endanger personal safety, such as nuclear energy devices, aerospace equipment, life support and maintenance equipment, and various safety

equipment. If you need the above, please contact the manufacturer's customer service.

Content

Product introduction I
Precautions of Safety II
1.Use occasions II
2.Wiring III
3.Operation III
4.Run III
5.Maintenance and Inspection III
6.Scope of use III
Chapter 1 Product Inspection and Installation 1
1.1 Product Inspection 1
1.2 Product front panel 1
1.3 Servo drive installation 2
1.4 Servo motor installation 3
1.5 Definition of Motor Rotation Direction 4
Chapter 2 Wiring 5
2.1 System composition and wiring 5
2.2 CN1 control signal terminal 6
2.3 Front panel terminal wiring diagram 12
2.4 Definition of control port CN1 and encoder port CN2A 13
2.5 Brake resistor connection and usage instructions 14
Chapter 3 Panel Operation 15
3.1 Driver panel description 15
3.2 Main Menu 16
3.3 Status monitoring 16
3.4 Parameter setting 20
3.5 Parameter management 21
3.6 Auxiliary function 22
3.7 Parameter default value restoration 24
Chapter 4 Running 26
4.1 No-load test run 26
4.2 Position Control 28
4.3 Speed Control 32
4.4 Torque Control 36
4.5 Gain Adjustment 38
4.6 Overtravel Protection 40
4.7 Working timing 41
4.8 Electromagnetic brake 43
Chapter 5 Parameters 45
5.1 List of parameters 45

5.2 List of DI functions 48
5.3 List of DO functions 48
5.4 Detailed explanation of parameters 48
5.5 Detailed explanation of DI function 73
5.6 Detailed explanation of DO function 76
Chapter 6 Troubleshooting and Diagnosis 77
6.1 List of alarms 77
6.2 Alarm reason and treatment 78
Chapter 7 Specifications and Adapter Motors 84
7.1 Drive Specifications 84
7.2 Standard 4 pole pairs motor table 86
7.3 Customized 5 pole pairs A series motor adaptation table 87
7.4 Customized 5 pole pairs B series motor adaptation table 88
Chapter 8 Quick Commissioning Guide 89
8.1 Notes on quick commissioning 89
8.2 Position control mode (quick commissioning) 90
8.3 Speed control mode (quick commissioning) 91
8.4 Torque control mode (quick commissioning) 93
8.5 Debugging typical problems and countermeasures 94
Chapter 9 Communication Function Description 97
9.1 Function overview and wiring diagram 97
9.2 Communication parameters 97
9.3 MODBUS communication protocol 98
9.4 Writing and reading of parameters 102
9.5 Description of monitoring state quantity address 102
9.6 Communication example 106

Chapter 1 Product Inspection and Installation

1.1 Product Inspection

This product has been fully functionally tested before leaving the factory. In order to prevent the product from being abnormal due to negligence during the delivery of the product, please check the following items in detail after unpacking:

- Check whether the model of the servo drive and servo motor is the same as the model ordered.
- Check whether the appearance of the servo drive and servo motor is damaged or scratched. If damage is caused during transportation, please do not connect to power.
- Check the servo drive and servo motor for loose components. Whether there are loose screws, whether the screws are not locked or come off.
- Check whether the rotor shaft of the servo motor can rotate smoothly by hand. Motors with brakes cannot rotate directly.

  If any of the above items are faulty or abnormal, please contact the dealer immediately

1.2 Product front panel

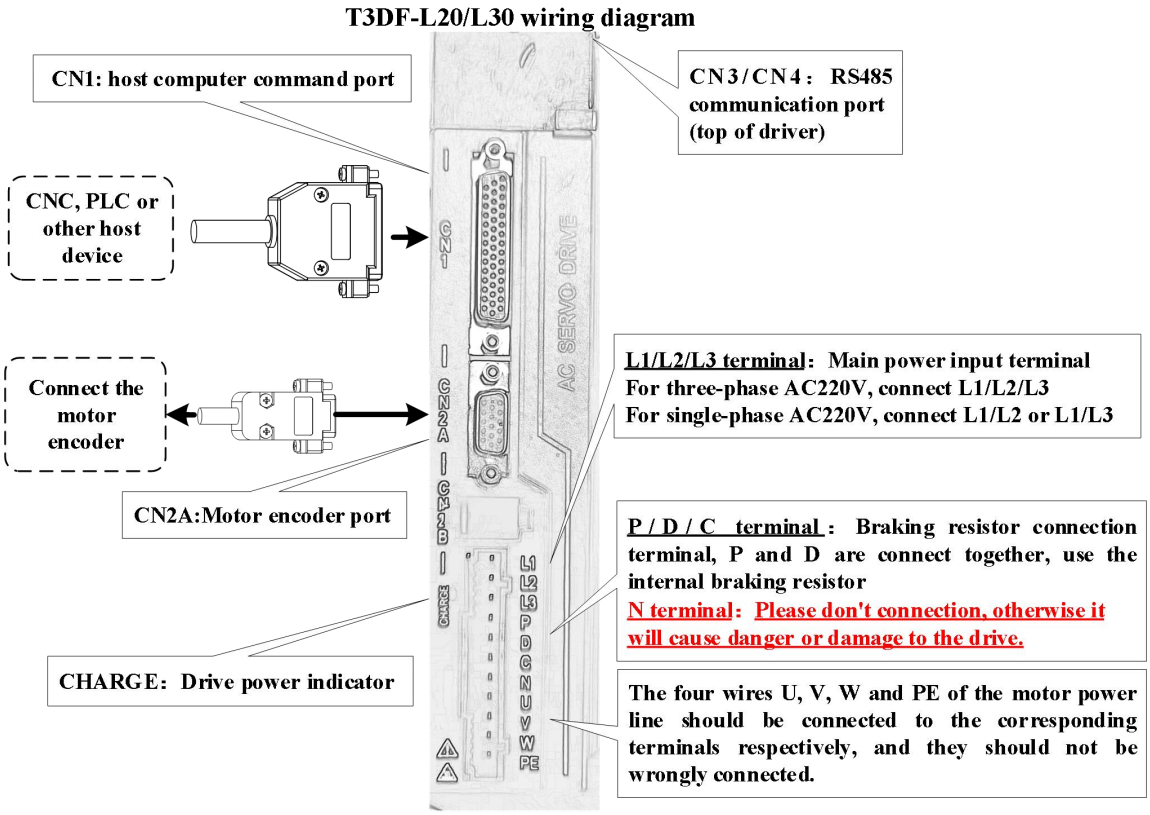

Figure 1.1 Schematic diagram of the front panel

1.3 Servo drive installation

1.3.1 Installation environment conditions

The installation environment of the servo drive has a direct impact on the normal function of the drive and its service life, so the installation environment of the drive must meet the following conditions:

- Working environment temperature: 0℃～40℃; working environment humidity: below 40%～80% (no condensation).
- Storage environment temperature: -40℃～50℃; Storage environment humidity: below 93% (no condensation).
- Vibration: below 0.5G.
- Prevent rain dripping or wet environment.
- Avoid direct sunlight.
- Prevent oil mist and salt corrosion.
- Prevent corrosive liquid and gas erosion.
- Prevent the intrusion of dust, cotton wool and metal fines.
- Keep away from radioactive materials and combustibles.
- When several drives are installed in the control cabinet, please pay attention to keep enough space for placement, which is conducive to air flow and heat dissipation. Please add a cooling fan to reduce the temperature around the servo drive. The long-term safe working temperature is below 40℃.
- When there is a vibration source nearby (such as a punch press), if it is unavoidable, please use a vibration absorber or install an anti-vibration rubber gasket.
- When there are interfering devices nearby, it may interfere with the power line and control line of the servo drive, which may cause the drive to malfunction. Noise filters and other various anti-interference measures can be added to ensure the normal operation of the driver. However, the noise filter will increase the leakage current, so it is necessary to install an isolation transformer at the power input end of the driver.

1.3.2 Installation method

- The normal installation direction of the servo drive is vertical and upright, with the top facing upwards to facilitate heat dissipation.
- Tighten the M5 fixing screws at the rear of the servo drive during installation.
- For the installation distance between servo drives and other devices, please refer to the figure on the next page. To ensure the performance and life of the drives, please leave as much installation space as possible.
- A cooling fan must be installed in the electrical control cabinet to ensure that there is vertical wind to dissipate heat from the radiator of the servo drive.
- When installing the electrical control cabinet, prevent dust or iron filings from entering the servo drive.

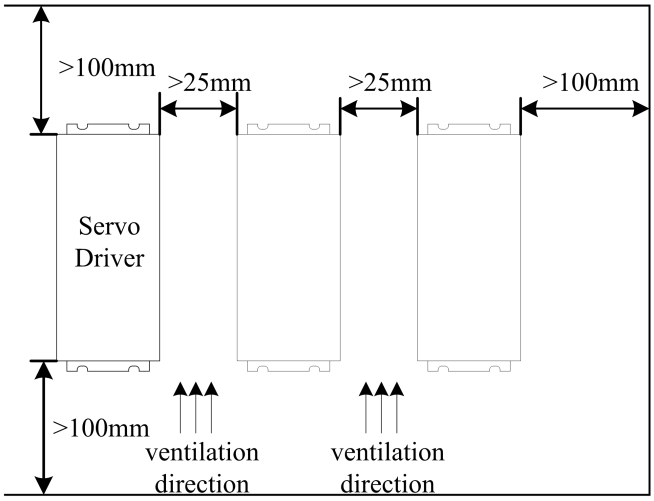

Figure 1.2 Servo drive installation diagram

1.4 Servo motor installation

1.4.1 Installation environment conditions

- Working environment temperature: 0 ～ 40℃; working environment humidity: below 80% (no condensation).
- Storage environment temperature: -40℃ ～ 50℃; Storage environment humidity: below 80% (no condensation).
- Vibration: below 0.5G.
- A well-ventilated place with little moisture and dust.
- No corrosive, flammable gas, oil and gas, cutting fluid, cutting powder, iron powder and other environments.
- Places without water vapor and direct sunlight.

1.4.2 Installation method

- Horizontal installation: To prevent water, oil and other liquids from flowing into the motor from the outlet end of the motor, please place the cable outlet at the bottom.
- Vertical installation: If the motor shaft is installed upwards and a reducer is attached, attention must be paid to prevent oil stains in the reducer from penetrating into the motor through the motor shaft.
- The extension of the motor shaft should be sufficient. If the extension is insufficient, the motor will easily vibrate when it moves.
- When installing and removing the motor, do not hit the motor with a hammer, otherwise the motor shaft and encoder may be damaged.

1.5 Definition of Motor Rotation Direction

The definition of the rotation direction of the motor described in this manual: facing the motor shaft extension, the counterclockwise rotation of the rotating shaft (CCW) is forward rotation, and the clockwise rotation (CW) of the rotating shaft is reverse rotation.

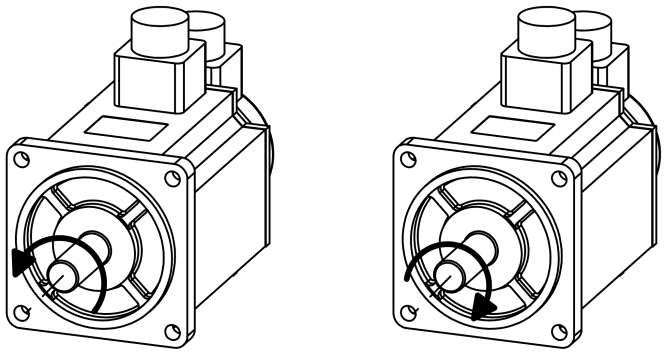

Forward Counter Clockwise (CCW)

Reverse Clockwise (CW)

Figure 1.3 Definition of the rotation direction of the servo motor

Chapter 2 Wiring

2.1 System composition and wiring

2.1.1 Wiring Instructions

Wiring Precautions:

- The wiring materials are used in accordance with the wire specifications.
- Cable length, command cable within 3m, encoder cable within 20m.
- Check whether the power supply and wiring of L1, L2, and T are correct. Do not connect the 220V servo to the 380V power supply.
- The phase sequence of the U, V, and W terminals of the motor output must be in one-to-one correspondence with the corresponding terminals of the driver. If the wrong connection is made, the motor may not rotate or run. The motor cannot be reversed by exchanging the three-phase terminals, which is completely different from the asynchronous motor.
- Must be grounded reliably and at a single point.
- The direction of the diode for absorbing the relay installed in the output signal must be connected in the correct direction, otherwise it will cause a fault and cannot output the signal.
- In order to prevent malfunction caused by noise, please add devices such as isolation transformer and noise filter to the power supply.
- Please wire the power wires (power wires, motor wires, etc. strong current circuits) and signal wires at a distance of more than 30cm, and do not place them in the same conduit.
- Please install a non-fuse circuit breaker so that the external power supply can be cut off in time when the drive fails.

2.1.2Wire Specifications

Connection terminal	Symbol	Gauge of wire
Power of main circuit	L1、L2	1.5 ~ 2.5mm^2
Terminal of motor	U、V、W	1.5 ~ 4mm^2
Terminal of ground	⏚	1.5 ~ 4mm^2
Terminal of control signal	CN1	≥0.14mm^2(AWG26),With shielded wire
Terminal of encoder signal	CN2A	≥0.14mm^2(AWG26),With shielded wire
Terminal of braking resistor	P、D、C	1.5 ~ 2.5mm^2

The encoder cable must be twisted pair. If the encoder cable is too long (>20m), it

will cause insufficient power supply of the encoder. The power supply and ground wire can be connected by multi-wire or thick wire.

2.1.3 Description of strong current terminals

Name	Symbol of terminal	Detailed description
Power of main circuit	L1、L2	To connect external AC power: Three-phase 220VAC -15% ~ +10% 50/60Hz
Terminal of braking resistor	P、D、C	When an external braking resistor is connected, it is used in parallel with the internal braking resistor. Please pay attention to the choice of resistance value and power to avoid burning out the driver.
Terminal of motor	U	Output to motor U phase power supply
	V	Output to motor V phase power supply
	W	Output to motor W phase power supply
Terminal of ground	PE /⏚	Motor housing ground terminal
	PE /⏚	Drive ground terminal

2.2 CN1 control signal terminal

The CN1 control signal terminal provides the signal required to connect with the upper controller. The type of the driver is different, and the type of socket used is also different. Signals include:

- 4 programmable inputs, 4 programmable outputs;
- Pulse command input (position command, speed command);
- Analog command input (speed command, torque command);
- Encoder signal output.

2.2.1 CN1 terminal signal description

Special note: DI1~DI6 are programmable input ports, whose functions are configured by parameters P100~P105; DO1~DO4 are programmable output ports, whose functions are configured by parameters P108~P111; see Chapter 5 5.4.2 for parameter configuration for detailed function description, please refer to Section 5.5~5.6 in Chapter 5. The following table shows the factory default configuration.

Number of terminal	Name of signal	Mark	Features
	The positive pole of the power supply of the input terminal	COM+	The positive pole of the power supply of the input terminal is used to drive the photocoupler of the input terminal, DC12～24V, current ≥100mA.
	DI1 Servo enable	SON	Servo enable input terminal. SON ON: allow the drive to work; SON OFF: The drive is turned off and the motor is in a free state. Note 1: The motor must be stationary before switching from OFF to ON. Note 2: After hitting SON ON, wait at least 50ms before entering the command.
	DI2 Alarm clear	ACLR	Alarm clear input terminal. ACLR ON: Clear the system alarm; ACLR OFF: Keep the system in alarm. Note 1: Some hardware fault alarm numbers cannot be cleared by this method, and need to be powered off for maintenance, and then powered on again.
	DI3 CCW drive disabled	CCWL	CCW (counterclockwise) drive prohibition input terminal. CCWL ON: CCW drive is allowed, the motor can rotate counterclockwise; CCWL OFF: CCW drive is prohibited, the motor is prohibited from rotating counterclockwise. Note 1: For mechanical overrun, when the switch is OFF, the torque in the CCW direction remains 0. Note 2: This function can be shielded by setting parameter Pr097, the user can enable the CCW drive without connecting this terminal.
	DI4 CW drive inhibit	CWL	CW (clockwise) drive prohibition input terminal. CWL ON: CW drive is allowed, the motor can rotate clockwise; CWL OFF: CW drive is prohibited, the motor is prohibited from rotating clockwise. Note 1: For mechanical overrun, when the switch is OFF, CW The directional torque remains at 0. Note 2: This function can be shielded by setting parameter Pr097, the user can enable CW drive without connecting this terminal.
	DI5 Position error cleared	CLE	In the position control mode (parameter Pr004=0), the position deviation counter clears the input terminal. CLE ON: During position control, the position deviation counter is cleared.
	DI6 Command pulse prohibited	INH	In position control mode (parameter Pr004=0), the input terminal of position command pulse is prohibited. INH ON : Command pulse input is prohibited; INH OFF: Command pulse input is valid.

Number of terminal	Name of signal	Mark	Features
	DO1 Servo ready for output	RDY	Servo is ready for output terminal. RDY ON: The main power supply is normal, the driver has no alarm, the servo is ready to output ON (output is turned on); RDY OFF: The main power is not connected or the drive has an alarm, the servo is ready to output OFF (output is cut off).
	DO2 Servo alarm output	ALM	Servo alarm output terminal. ALM ON: The servo drive has no alarm, and the servo alarm output is ON (the output is on); ALM OFF: The servo drive has an alarm, and the servo alarm output is OFF (the output is cut off).
	DO3 Positioning arrive output; (in position control mode)	COIN	Positioning complete output terminal. COIN ON: When the position deviation counter value is within the set positioning range, the positioning completion output is ON (output is on), otherwise the output is OFF (output is off).
	DO4 Mechanical brake release	BRK	When the motor has a mechanical brake (retainer), this port can be used to control the brake. BRK ON: The brake is energized, the brake is invalid, and the motor can run; BRK OFF: The brake is cut off, the brake is valid, the motor is locked and cannot run. Note: BRK function is controlled internally by the driver.
	Command pulse PLUS input	PULS +	External command pulse input terminal. Note 1: The pulse input mode is set by parameter P-035, ● P-035=0, command pulse + symbol mode (default state); ● P-035=1, CCW/CW command pulse mode; ● P-035=2, A/B quadrature pulse mode.
		PULS −	
	Command pulse SIGN input	SIGN +	
		SIGN −	

Number of terminal	Name of signal	Mark	Features
	Analog speed command input	AS +	External analog command input terminal, differential mode, input impedance 10kΩ, input range -10V ~ +10V.
		AS −	
	Analogously	GNDA	Ground for analog input.
	Encoder A-phase signal	OA +	● Encoder ABZ signal differential drive output (26LS31 output, equivalent to RS422); ● Non-isolated output (non-isolated).
		OA −	
	Encoder B-phase signal	OB +	
		OB −	
	Encoder Z-phase signal	OZ +	
		OZ −	
	Encoder Z-phase open collector output	CZ	● The encoder Z-phase signal is output by the open-collector. When the encoder Z-phase signal appears, the output is ON (the output is on), otherwise the output is OFF (the output is off); ● Non-isolated output (non-isolated); ● On the host computer, the Z-phase signal pulse is usually very narrow, so please use a high-speed photocoupler to receive it.
	Encoder common ground	GND	Encoder common ground.
	Shielded ground wire	FG	Shield ground terminal.

2.2.2 CN1 terminal interface type

The following will introduce each interface circuit of CN1 and the wiring method with the upper control device.

1. Digital input interface (C1)

The digital input interface circuit can be controlled by switches, relays, open collector transistors, optocouplers, etc. The relay needs to choose a low current relay to avoid the phenomenon of poor contact. External voltage range DC12V ~ 24V.

C1-1:switch input	C1-2:open collector transistor

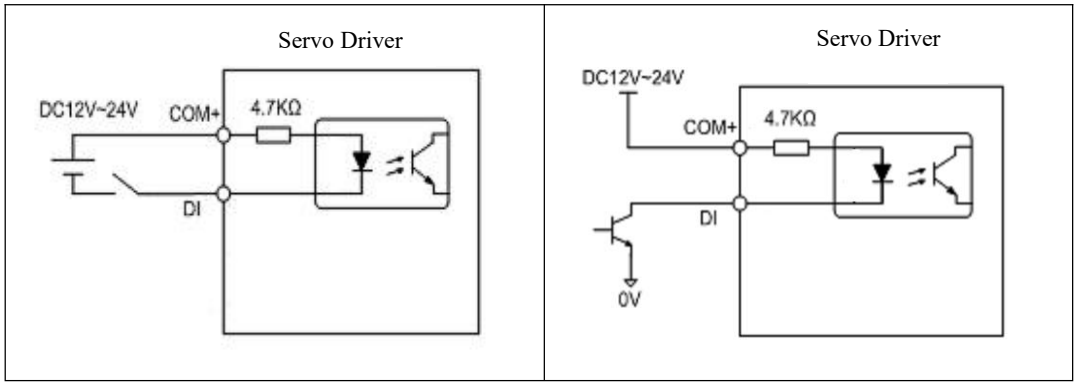

2. Digital output interface (C2)

The output circuit adopts Darlington photocoupler, which can be connected with relay and photocoupler. Note:

- The power supply is provided by the user. If the power supply is reversed, the drive will be damaged.
- The maximum external power supply is 25V, the maximum output current is 50mA, and the sum of the three currents does not exceed 100mA.
- When using an inductive load such as a relay, a diode should be added in parallel with the inductive load. If the polarity of the diode is reversed, the driver will be damaged.
- When turned on, the voltage drop is about 1V, which cannot meet the TTL low level requirement, so it cannot be directly connected to the TTL circuit.

C2-1:relay	C2-2:optocoupler
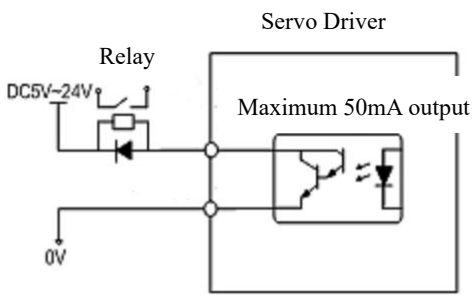	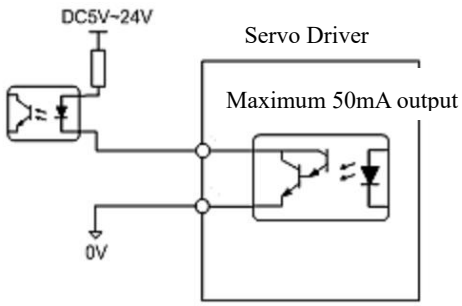
● A freewheeling diode must be added.	

3. Position pulse command interface (C3)

There are two connection methods: differential drive and single-ended drive. Differential drive connection is recommended. Wiring should be twisted pair. The driving current is 8~15mA, and the working mode is set by parameter P035: pulse + sign, forward/reverse pulse, quadrature pulse.

C3-1:Differential drive	C3-2: Single-ended drive
Servo Driver	Servo Driver

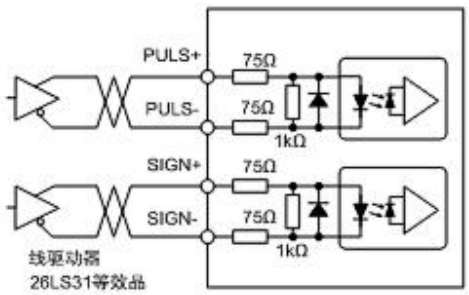

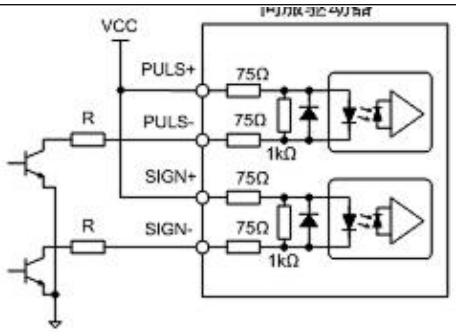

- Maximum pulse frequency 500kHz (kpps);
- It should not be disturbed. This connection method is recommended.

- Maximum pulse frequency 200kHz (kpps);
- Recommended resistance R resistance value:

VCC	R
5V	82Ω~120Ω
12V	510Ω~820Ω
24V	1.5kΩ~2kΩ

4. Encoder signal line driver output (C5)

After dividing the encoder signal frequency, it is output to the upper controller through the Line Driver.

C5-1: long line receiver	C5-2: Optocoupler receive
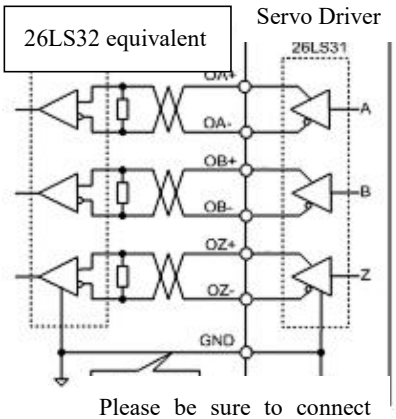 Please be sure to connect the signal ground on both	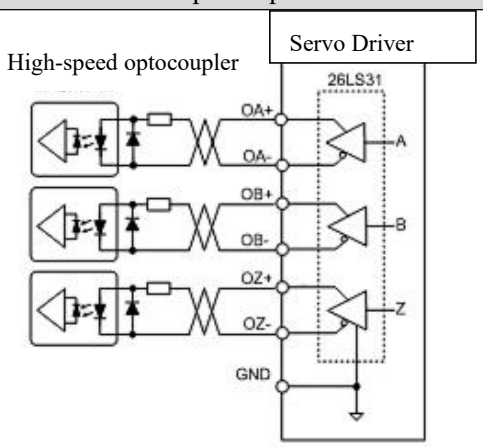
Tl AM26LS32 equivalent as the receiver, and must be connected to the terminal resistance, the resistance value 220Ω ~ 470Ω; The driver encoder signal ground (GND) must be connected to the upper controller signal ground.	The upper controller uses a high-speed optocoupler (such as 6N137), and the resistance of the current limiting resistor is about 220Ω.

5. Encoder Z signal open collector output (C6)

The encoder Z signal is output to the upper controller through the open collector. Due to the narrow pulse width of the Z signal, please use a high-speed photocoupler to

receive.

C6: Encoder Z signal open collector output
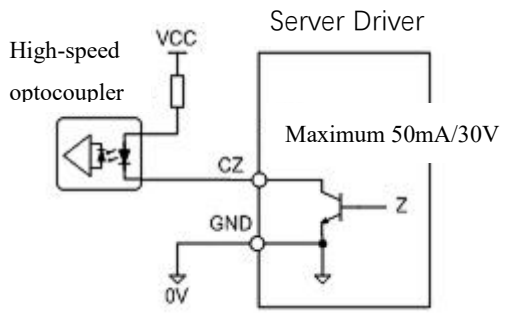
● The maximum external power supply i s 30V, and the maximum output current is 50mA.

2.3 Front panel terminal wiring diagram

T3DF-L20/L30 wiring diagram

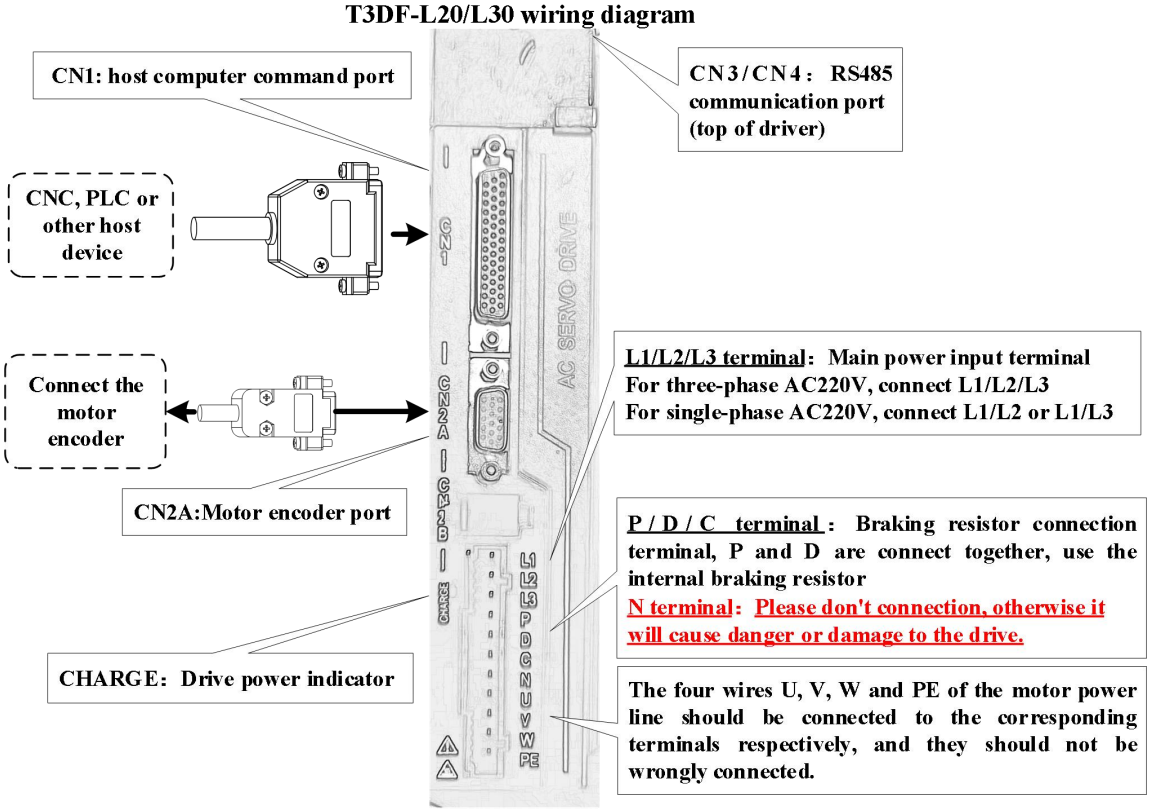

2.4 Definition of control port CN1 and encoder port CN2A

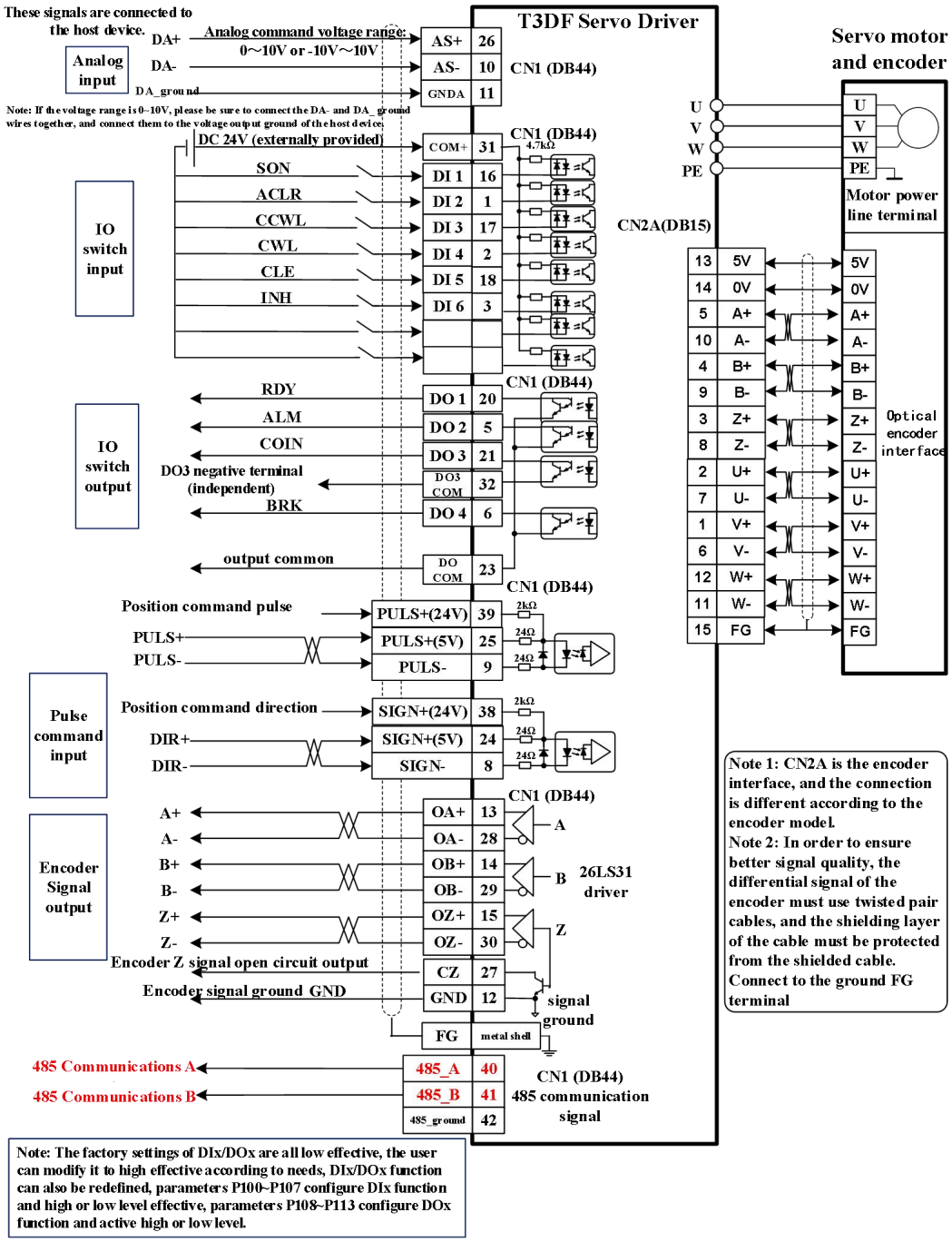

NOTE:

If the pulse command signal is 24V power supply, PULS+ must be connected to pin 39 of CN1, and SIGN+ must be connected to pin 38 of CN1, otherwise the pulse command port may be damaged;

If the pulse command signal is 5V power supply, PULS+ must be connected to pin 25 of CN1, and SIGN+ must be connected to pin 24 of CN1, otherwise the pulse reception may not be normal.

2.5 Brake resistor connection and usage instructions

If the internal brake resistor is used, terminals P and D need to be short-circuited, that is, they can be used normally according to the factory condition, as shown on the left below. If an external brake resistor is used, the short metal strip between P and D must be disassembled first, and then the external brake resistor must be connected between the terminals P and C, as shown in the figure on the right below.

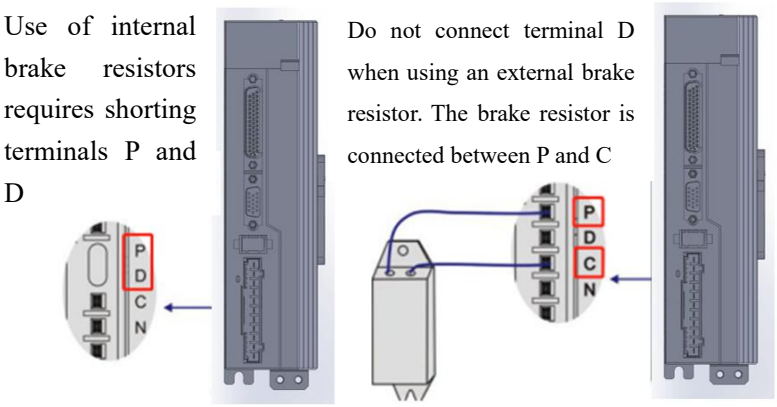

Special note:

Do not connect the external brake resistor to the positive and negative terminals P and N of the bus, otherwise it will cause explosion and fire;

Do not be smaller than the minimum allowable resistance of 25 ohms; otherwise, the drive may alarm or damage.

Chapter 3 Panel Operation

3.1 Driver panel description

3.1.1 Panel Composition

The T3DF series panels are composed of 5 LED digital tube displays, 4 buttons ▲、▼、◀、Enter, which are used to display various status and setting parameters of the system.

T3DF operation panel

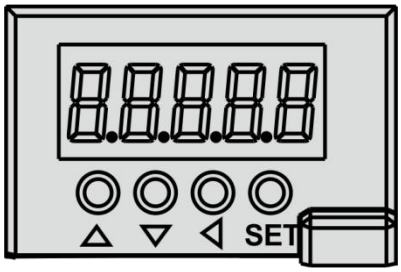

3.1.2 Panel Description

Symbol	Name	Features
POW	Power light (none)	The decimal point of the second digital tube from the left is bright, indicating servo undervoltage
RUN	Running lights (none)	The decimal point of the first digital tube from the left is bright, indicating that the servo is enabled
▲	Add key	Increase the serial number or value; long press has repeat effect.
▼	Decrease key	Decrease number or value; long press has repeat effect.
◀	Escape key	Menu exit; operation canceled.
Enter	Enter key	Menu entry; parameter modification confirmation or operation confirmation.

3.1.3 Numerical display

The numerical value adopts 5 digital tube displays. The minus sign in front of the numerical value indicates a negative number. If it is a 5-digit negative number, all the decimal points are lit to indicate a negative number. Some display items are preceded by a prefix character. If the number of digits of the value is too long to occupy the position of the prefix character, the prefix character will not be displayed, and only the value will be displayed. The specific display meanings are as follows:

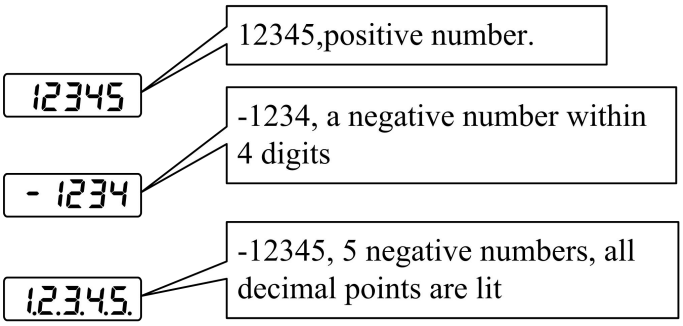

3.2 Main Menu

The first layer is the main menu, there are 4 operation modes, use the ▲ and ▼ keys to change the mode, press the Enter key to enter the second layer, perform specific operations, and press the ◀ key to return to the main menu from the second layer.

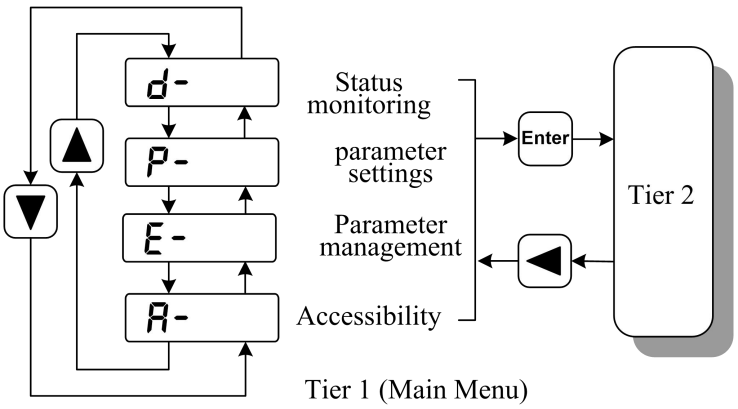

3.3 Status monitoring

Select status monitoring "d-" in the main menu, and press Enter to enter the monitoring mode. There are a variety of monitoring items, the user can use the ▲, ▼ keys to select the desired display item, and then press the Enter key to enter the specific display state. The specific meanings of the status monitoring display items are as follows:

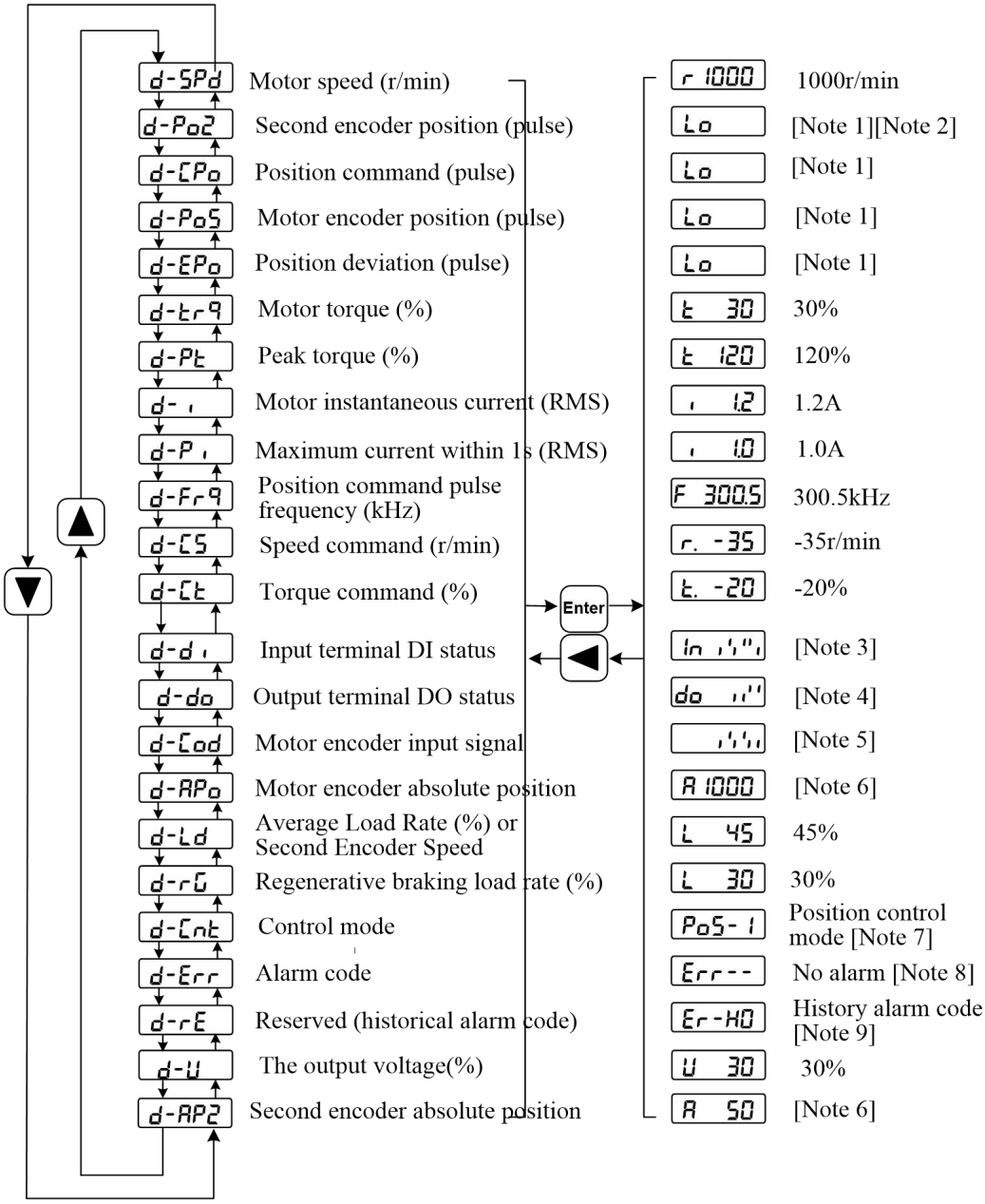

1. 32-bit binary value display [Note 1]

The range of 32-bit binary numbers is -2147483648 ~ 2147483647, which is represented by the combination of low and high bits. Select the low and high bits through the menu, and use the formula in the figure to synthesize the complete value.

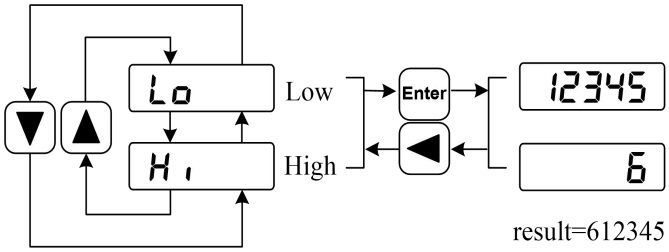

32-bit value = high-order value × 100000 + low-order value

2. Pulse unit [Note 2]

The pulses of the original position command refer to the number of input pulses, which have not been transformed by electronic gears. The pulse unit of other items is the encoder pulse unit. Take the use of a 2500-line encoder as an example:

$$\begin{aligned}\text{Encoder pulse unit} &= \text{encoder resolution}\\ &= 4\times\text{Number of encoder lines}\\ &= 4\times 2500(pulse/rev)\\ &= 10000(pulse/rev)\end{aligned}$$

3. Input terminal DI [Note 3]

The vertical line of the digital tube represents the state of one bit, the stroke on the vertical line lights up to indicate ON, and the lower stroke lights up to indicate OFF.

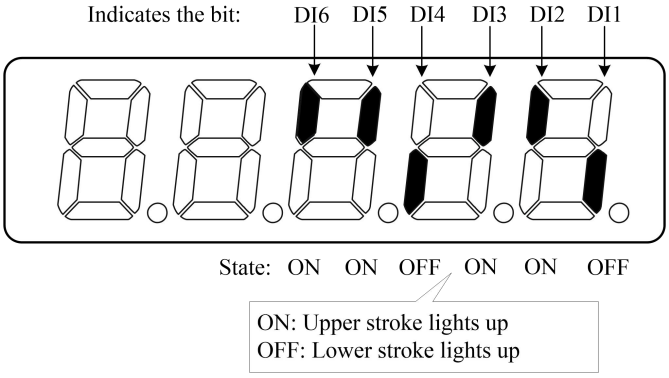

4. Output terminal DO[Note 4]

The vertical line of the digital tube represents the state of one bit, the stroke on the vertical line lights up to indicate ON, and the lower stroke lights up to indicate OFF.

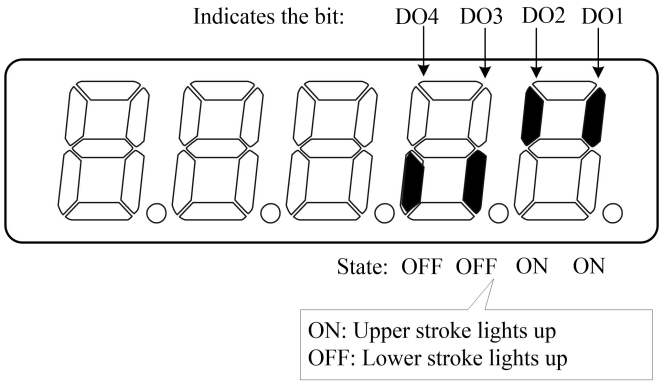

5. Encoder input signal [Note 5]

The vertical line of the digital tube represents the state of one bit, the stroke on the

vertical line is lit to indicate a high level, and the lower stroke is lit to indicate a low level. (Note: absolute position encoder, this display is meaningless)

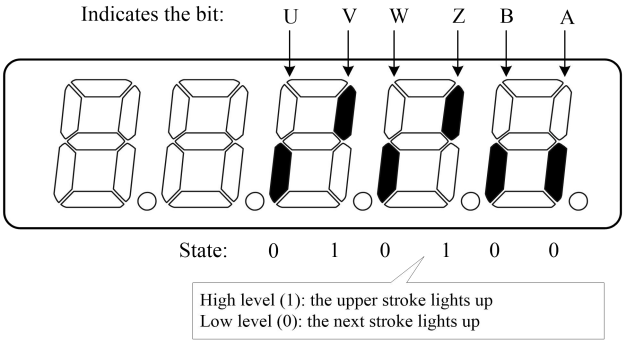

6. Rotor single-turn position [Note 6]

Indicates the position of the rotor relative to the stator in one revolution, one revolution is one cycle, the minimum resolution of the encoder is the unit, and the Z pulse of the encoder is the origin.

2500 line encoder: Its range is 0 ~ 9999 (decimal system), the value is 0 when Z pulse appears.

7. Control method [Note 7]

The first 3 characters indicate the control mode, and the last character indicates the gain combination.

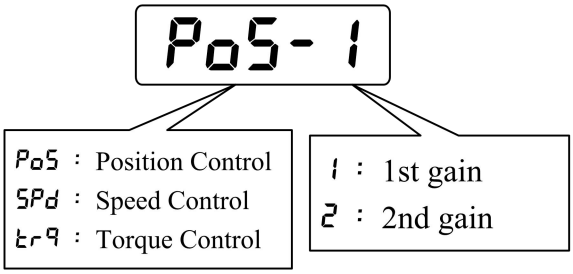

8. Alarm code [Note 8]

No alarms show two minus signs. When there is an alarm, the alarm number is displayed and flashes. When the alarm occurs, the display will automatically enter the state monitoring and display the alarm number, but other operations can be performed through the keyboard. When it is not in the monitoring state, the decimal point of the rightmost digital tube flashes to indicate that there is an alarm. Specific examples are as follows:

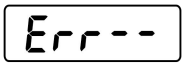

No alarm

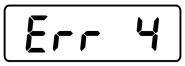

Flicker Alarm No. 4

9. History alarm code [Note 9]

The historical alarm code displays the last 10 alarm contents of the drive. If there is no alarm, it will display two minus signs, and if there is an alarm, it will display the alarm number. When an alarm occurs, the drive will automatically update and store the

alarm number. The historical alarm code viewing operation and specific display contents are explained as follows:

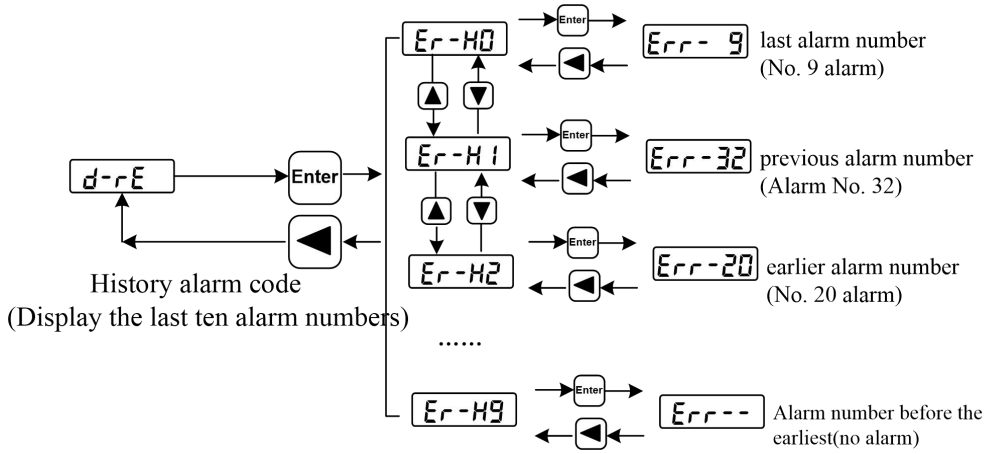

The method of clearing the historical alarm codes is as follows: in the case of no alarm, first set the parameter P-119 to 4, and then follow the steps below to clear all the historical alarm codes.

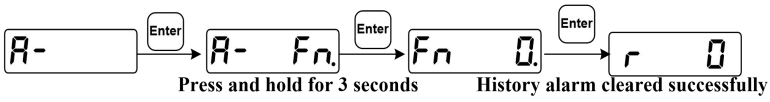

3.4 Parameter setting

The parameter is represented by parameter segment and parameter number, the hundreds digit is the segment number, and the tens and one digits are the parameter number. For example, for parameter P-102, the segment number is "1", the parameter number is "02", and the digital tube display is "P- 102".

Select parameter setting "P-" in the main menu, and press Enter to enter the parameter setting mode. First, use the ▲ and ▼ keys to select the parameter section, after selecting it, press the Enter key to enter the parameter number selection of this section. Next, use the ▲ and ▼ keys to select the parameter number. After selecting, press the Enter key to display the parameter value.

Use the ▲ and ▼ keys to modify the parameter value. Press the ▲ or ▼ key once to increase or decrease the parameter by 1. Press and hold the ▲ or ▼ key to continuously increase or decrease the parameter. When the parameter value is modified, the decimal point of the rightmost LED nixie tube lights up, press the Enter key to confirm that the modified value is valid, at this time the decimal point of the right LED nixie tube goes out, and the modified value will be immediately reflected in the control (some parameters need to be saved after re-power on for it to work).

After that, you can continue to modify the parameters. After the modification, press the ◀ key to return to the parameter number selection state. If you are not satisfied with the value being modified, do not press the Enter key to confirm, but press the ◀ key to cancel, and the parameter returns to the original value.

The modified parameters are not saved in the EEPROM. If you need to save them permanently, please use the parameter write operation in the parameter management.

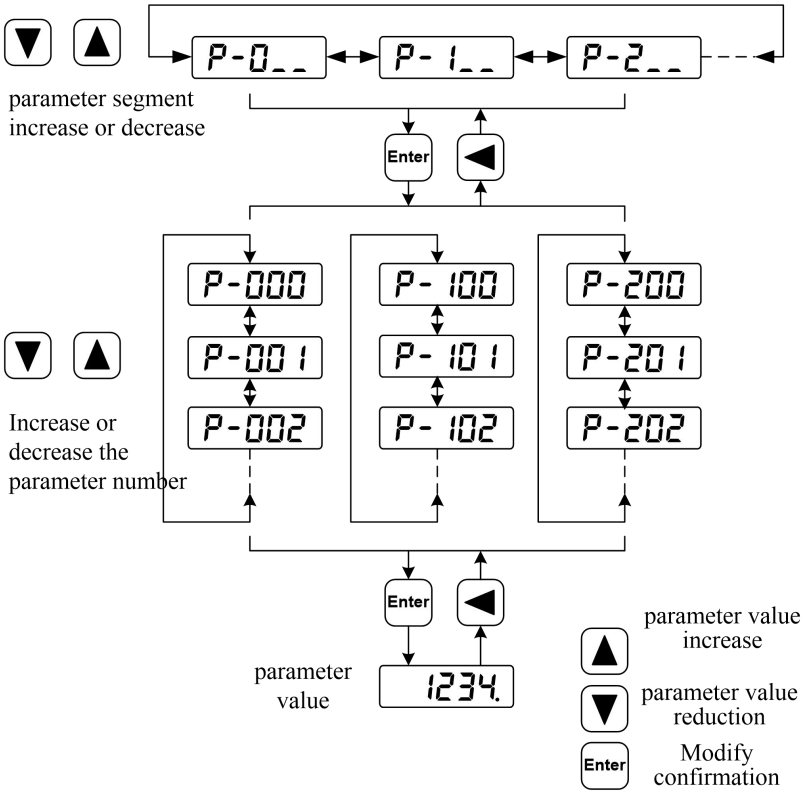

3.5 Parameter management

The parameter management mainly deals with the operation between the parameter table and the EEPROM. Select the parameter management "E-" in the main menu, and press the Enter key to enter the parameter management mode.

Select the operation mode, there are 3 modes, use the ▲, ▼ keys to select. After the action is selected, press and hold the Enter key for more than 3 seconds to activate the action. After finishing, press ◄ key to return to the operation mode selection state.

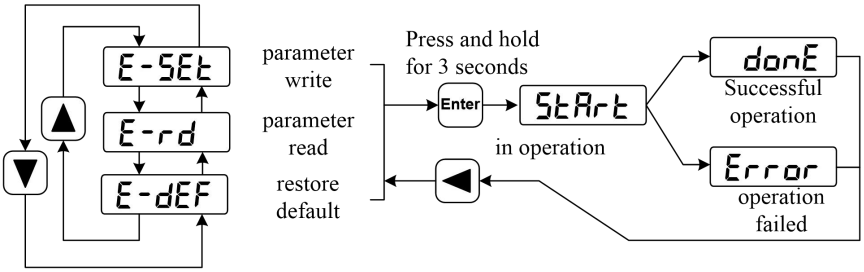

- **Parameter write**

Indicates that the parameters in the parameter table are written into the EEPROM. When the user modifies the parameter, only the parameter value in the parameter table is changed, and the next time the power is turned on, it will be restored to the original value. If you want to permanently change the parameter value, you need to perform the parameter write operation, write the parameters in the parameter table into the EEPROM, and the modified parameters will be used after power-on.

- **Restore default value**

Indicates that the default values (factory values) of all parameters are read into the parameter table and written into the EEPROM, and the default parameters will be used next time the power is turned on. When the user messes up the parameters and cannot work normally, use this operation to restore all the parameters to the factory state. Because the default values of the parameters corresponding to different drive models and motor models are different, when using the restore default parameters, you must first ensure the correctness of the motor manufacturer (parameter P-099) and the motor code (parameter P-002).

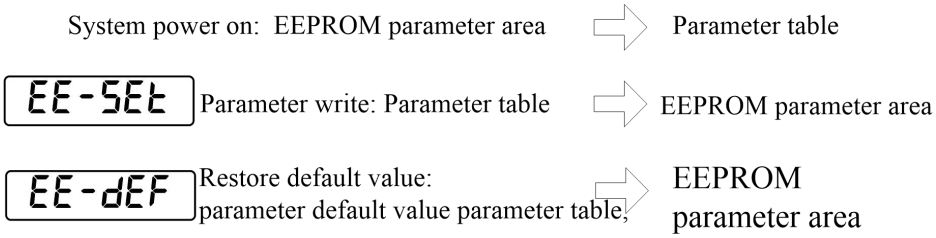

3.6 Auxiliary function

Select the auxiliary function "A-" in the main menu, and press Enter to enter the auxiliary function mode. Use the ▲, ▼ keys to select the operation mode. After selecting the operation, press the Enter key to enter the corresponding function, and press the ◀ key to return to the operation mode selection state after completion.

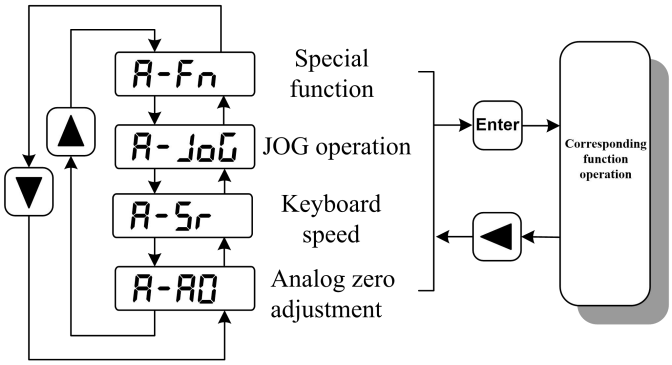

3.6.1 Function brief

3.6.2 Analog zero adjustment

When this operation is used, the drive will automatically detect the analog zero offset and write the zero offset value into parameter P-047 (or P-054). This operation already saves the zero offset parameters to the EEPROM, so there is no need to perform a parameter write operation.

The operation method is as follows: (1) The host computer first outputs 0V analog quantity, enables the servo drive, then selects the analog quantity zero adjustment "A-AO", and presses the Enter key to enter; (2) If the drive control mode is the analog quantity speed mode , then select the speed analog zero adjustment "O-SPd" through the menu; if the drive control mode is the analog torque mode, select the torque analog zero

adjustment "0-trq" through the menu; (3) After selecting the operation, press Enter and hold for more than 3 seconds to activate the action. After finishing, you can press ◀ key to return to the menu selection state, the specific display is as follows:

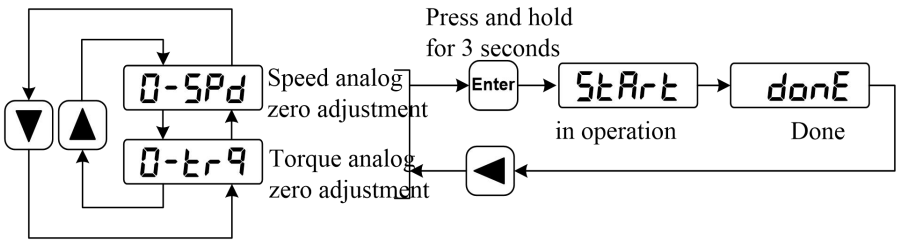

3.6.3 Jog (JOG) operation

Power on the drive first, after confirming that there is no alarm or any abnormal situation, the servo enable (SON) is ON, and the RUN indicator light is on. At this time, the motor is excited and is in a zero-speed state.

In the auxiliary function, select the jog operation "A-JoG", and press the Enter key to enter the jog (JOG) operation mode. The jog prompt is "J", the numerical unit is r/min, and the speed command is provided by the key. Press the ▲ key and hold, the motor runs at the JOG speed forward (CCW), release the key, the motor stops and maintains zero speed; press the ▼ key and hold, the motor runs at the JOG speed reverse (CW), release Press the button, the motor stops and maintains zero speed.

Note: The JOG speed is set by the parameter P-076 (unit is r/min), the servo enable is controlled by the external switch value or by the parameter P-098 (set to 1 to force the drive internally, set to 0 to disable).

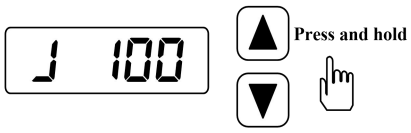

3.6.4 Keyboard Speed Control

Power on the drive first, after confirming that there is no alarm or any abnormal situation, the servo enable (SON) is ON, and the RUN indicator light is on. At this time, the motor is excited and is in a zero-speed state.

In the auxiliary function, select the keyboard speed control "A-Sr", and press Enter to enter the keyboard speed control mode. The keyboard speed control prompt is "r.", the numerical unit is r/min, and the speed command is provided by the key. Use ▲, ▼ keys to change the speed command, the motor runs at the given speed. Positive numbers indicate forward rotation (CCW), negative numbers indicate reverse rotation (CW), and the minimum given speed is 0.1r/min.

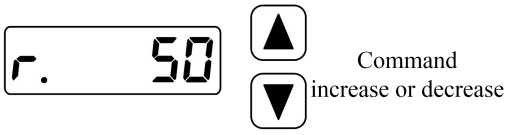

Note: The keyboard speed adjustment needs to set the control mode to speed control mode, that is, set parameter P-004 to 1 (power-off restart takes effect); servo enable is controlled by external switch value or by parameter P-098 (set to 1 drive Internal forced enable, set to 0 to disable).

3.7 Parameter default value restoration

In the following situations, please use the function of restoring default parameters (factory parameters):

- The parameters are adjusted in disorder, and the system cannot work normally;
- Replace the motor, the new motor is different from the original motor;
- The driver code (parameter P-001) and the motor code (parameter P-002) do not match due to other reasons.

The steps to restore default parameters are as follows:

1. Make sure that the servo enable signal(SON) of the drive is in the OFF state, change the password (parameter P-000) to 385 or 316, and check whether the motor series (parameter P-099) and motor code (parameter P-002) are correct. If correct, go to step 3, if not, go to step 2:
2. Modify the motor series (parameter P-099) and motor code (parameter P-002) to the required motor series and model. For the motor code, see the motor adaptation table in chapter 7.2;
3. Enter parameter management and perform one of the following two operations:

(1) Restore the default values of some parameters

Only the default parameters related to the drive and motor are restored, and other user parameters are reserved. Execute the parameter writing operation in parameter management. This operation only has the function of restoring the default value when the password is 385 (or 316) and the motor code is modified. In other cases, only the parameter writing function is available.

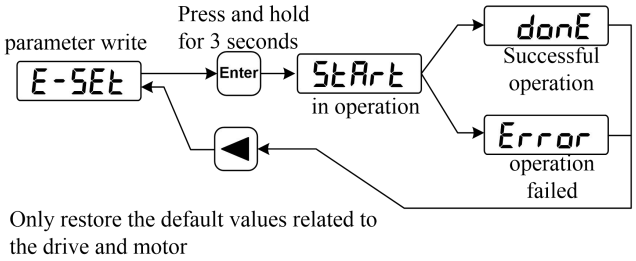

(2) Restore all parameter default values

All parameters are restored to their default values, and parameters modified by the user are also restored to their factory default values. Perform the operation of restoring default values in parameter management.

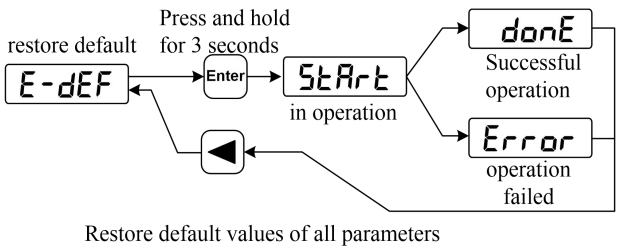

4. Turn off the power and turn it on again to work.

Chapter 4 Running

4.1 No-load test run

The purpose of the test run is to confirm that the following are correct:

- Drive power wiring;
- Servo motor power line wiring;
- Encoder wiring;
- Servo motor running direction and speed.

Special attention: This series of servo drives adopts the integrated design of control power supply and high-power power supply. In order to use the drive smoothly, please read the working sequence diagram in Section 4.7 carefully. The host computer controller must strictly follow the requirements of this sequence diagram.

4.1.1 Wiring and Inspection

Before applying power, confirm the following:

- The motor is no-load, do not add load to the motor shaft, and please disconnect the connector if it has been installed on the machine;
- Due to the impact of motor acceleration and deceleration, the motor must be fixed;
- Whether the wiring is correct, especially whether the U, V, W of the driver corresponds to the wiring of U, V, and W of the motor, and whether the wiring of the driver R, S, and T is correct;
- Whether the input voltage meets the requirements indicated on the nameplate;
- Check whether the encoder cable is connected correctly.If the servo drive is a standard application, please refer to Chapter 8 for quick debugging and application.

4.1.2 Set the motor code and encoder type

Turn on the main circuit power supply, the POW indicator of the driver will light up, and the display panel will light up. If an alarm occurs, please check the connection. Set the motor code parameters as follows:

1. Modify the operation password (parameter P-000) to 385;
2. Modify the motor series (parameter P-099) and motor code (parameter P-002) to the required motor model. The motor model code is showing in chapter 7.2;
3. Enter the parameter management, and execute the operation to restore the default value, as shown in the figure below:

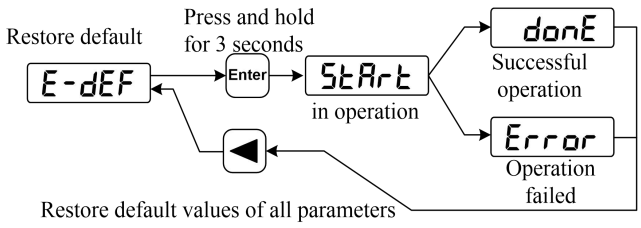

4. Set other functional parameters, execute E-SEt operation to save the parameters, if

donE is displayed, the parameters are saved successfully, and other debugging can be performed after restarting the drive;

5. After the drive is powered off and restarted, the trial operation can be performed. The trial operation methods are provided as follows:

a. Trial operation of keyboard speed regulation (Fn -20);

b. JOG jog test run;

4.1.3 Keyboard Speed Adjustment Trial Run (Fn -20)

1. Power up

Turn on the main circuit power supply, the POW indicator of the driver will light up, and the display panel will light up. If an alarm occurs, please check the connection.

2. Operation

After confirming that there are no alarms and any abnormal conditions, perform the following operations as shown below:

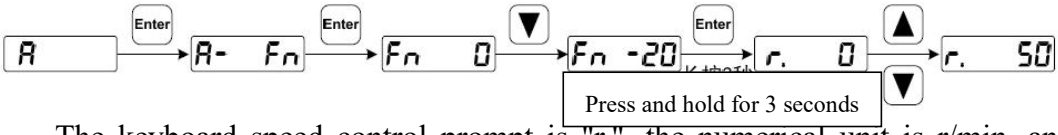

The keyboard speed control prompt is "r.", the numerical unit is r/min, and the speed command is provided by the key. Use ▲, ▼ keys to change the speed command, the motor runs at the given speed. Positive numbers indicate forward rotation (CCW), negative numbers indicate reverse rotation (CW), and the minimum given speed is 0.1r/min.

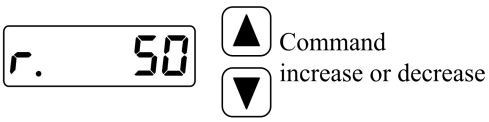

After the keyboard speed adjustment test run without any abnormality, the mechanical load can be connected, and the next step of debugging can be carried out under the control command of the host computer controller.

4.1.4 JOG test run

1. Power up

Turn on the main circuit power supply, the Pow indicator of the driver will light up, and the display panel will light up. If an alarm occurs, please check the connection.

2. Operation

After confirming that there is no alarm or any abnormal situation, set P098 to 1, then the servo enable (SON) is ON, and the RUN indicator light is on. At this time, the motor is excited and is in a zero-speed state.

In the auxiliary function, select the jog operation "A-JoG", and press the Enter key to enter the jog (JOG) operation mode. The jog prompt is "J", the value unit is r/min, and the speed command is provided by the key:

Press the ▲ key and hold, the motor runs at the JOG speed forward (CCW), release the key, the motor stops and maintains zero speed; press the ▼ key and hold, the motor runs at the JOG speed reverse (CW), release Press the button, the motor stops and

maintains zero speed.

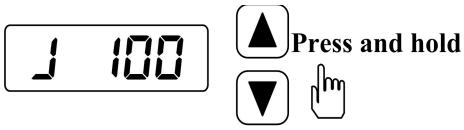

The JOG speed is set by parameter P076, and the default speed is 100r/min. If the motor runs normally, you can go to the next step (position control or other working methods).

4.2 Position Control

Position control is used in systems that require precise positioning, such as CNC machine tools, textile machinery, etc. The source of the position command is the pulse command, and the pulse is input from the PULS+, PULS- and SIGN+, SIGN- of the input terminal. The user needs to make correct wiring according to the description of the position control wiring diagram, combined with the actual use requirements, and then set the relevant parameters of the position control. A simple example of position control given in this manual is as follows:

4.2.1 Wiring diagram of position control

The parameter settings of this example are as follows: (other parameters use the factory default values)

parameter	name	Settings	Default value	Parameter Description
P-004	Control mode	0	0	Set to position control mode
P-097	Ignore drive inhibit	0（Use driver prohibited）	3(Ignore drive inhibit)	Set to 0 to use Forward Drive Disable (CCWL) and Reverse Drive Disable (CWL). If it is set to 3, the positive and negative limit positions are ignored, and CCWL and CWL can not be connected. The user needs to set this parameter correctly according to the actual usage, see section 4.6 for details.

4.2.2 Position command

1. Parameters related to position commands

Parameter	Name	Range of parameter	Default value	unit	applicable
P-029	Position command pulse electronic gear 1st numerator	1 ~ 32767	1		P
P-030	Position command pulse electronic gear denominator	1 ~ 32767	1		P
P-035	Position command pulse mode	0 ~ 2	0		P
P-036	Position command pulse input direction	0 ~ 1	0		P
P-037	Position command pulse input signal logic	0 ~ 3	0		P

P-038	Position command pulse signal filter coefficient	0 ~ 15	2		P
P-040	Position command exponential smoothing filter time	0 ~ 10000	0	0.1ms	P

2. Command pulse transmission path

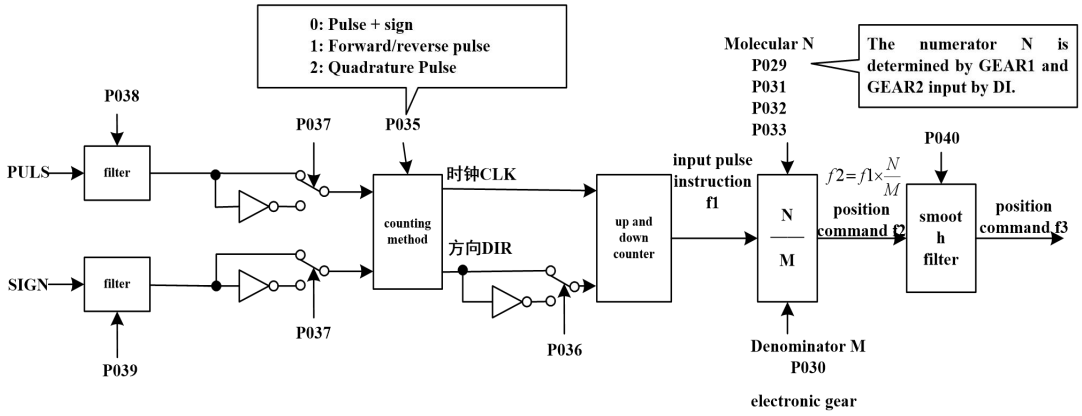

3. Command pulse input mode

The input mode is determined by parameter P-035; the phase of the input signal PULS and SIGN signal can be set by parameter P-037, which is used to adjust the counting edge; the parameter P-036 is used to change the counting direction, and it is set to 1 to reverse the count value.

Pulse command format	Forward rotation (CCW)	Reverse (CW)	Parameter P035
pulse + direction	PULS SIGN		0
CCW/CW pulse	PULS SIGN		1
A/B quadrature pulse	PULS SIGN		2

4. Smoothing filter

As shown in the figure below, parameter P-040 is used to smooth and filter the command pulse, with exponential acceleration and deceleration. The filter does not lose input pulses, but there is a command delay phenomenon. When set to 0, the filter has no effect. The parameter value represents the time for the frequency to rise from 0 to 63.2% of the position command frequency.

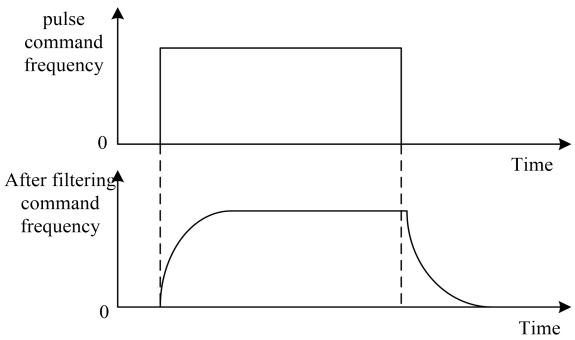

The filter smoothes the incoming pulse frequency. This filter is used in situations where the host controller has no acceleration/deceleration function, the electronic gear ratio is large, and the command frequency is low.

4.2.3 Input electronic gear

(1) Basic description of electronic gear ratio

Through the electronic gear, the unit pulse command input to the device can be defined to make the transmission device move any distance. The pulse command generated by the upper controller does not need to consider the gear ratio, reduction ratio or the number of motor encoder lines of the transmission system. The following table is the description of electronic gear variables:

variable	variable description	The value of this device
C	Encoder lines/bits	2500 lines
P_t	By default (electronic gear ratio is 1:1) the number of pulses required for one revolution of the encoder (pulse/rev)	=4×C =4×2500 =10000(pulse/rev)
R	Reduction ratio	$R=B/A$, in A: The number of revolutions of the motor; B: The number of revolutions of the load shaft.
ΔP	One command pulse movement amount	
P_c	The number of command pulses for one rotation of the load shaft	
Pitch	Ball screw pitch (mm)	
D	Roller diameter (mm)	

Calculation formula:

$$\text{Electronic gear ratio}\left(\frac{N}{M}\right)=\frac{\text{Encoder one revolution resolution}(P_t)}{\text{The number of command pulses for one rotation of the load shaft}\ (P_c)\times\text{Reduction ratio}(R)}$$

$$\text{The number of command pulses for one rotation of the load shaft}\ (P_c)=\frac{\text{The amount of movement per revolution of the load shaft}}{\text{One command pulse movement amount}(\Delta P)}$$

Divide the above calculation result, make the numerator and denominator both less than or equal to the integer value of 32767, and write it into the parameter.

(2) Electronic gear ratio dynamic switching function

The driver provides 4 groups of electronic gear molecules N, which can be changed online, determined by GEAR1 and GEAR2 of DI input. The denominator M (parameter P-030) is the same.

Parameter P-034 can be used to set the dynamic electronic gear application mode, the details are as follows:

P-034 is set to 0: The use of dynamic electronic gear ratio switching is prohibited, and the numerator of the command pulse electronic gear is set by P-029;

P-034 is set to 1: dynamic electronic gear ratio switching is allowed, and the command pulse electronic gear numerator is determined by GEAR1 input by DI;

DI signal [Note] GEAR1	Command pulse electronic gear numerator N
0	1st molecule (parameter P-029)
1	2nd molecule (parameter P-031)

P-034 is set to 2: dynamic electronic gear ratio switching is allowed, and the command pulse electronic gear numerator is determined by GEAR1 and GEAR2 input by DI.

DI signal [Note]		Command pulse electronic gear numerator N
GEAR2	GEAR1	
0	0	1st molecule (parameter P-029)
0	1	2nd molecule (parameter P-031)
1	0	The third molecule (parameter P-032)
1	1	4th molecule (parameter P-033)

Note: 0 means OFF, 1 means ON.

4.2.4 Gains related to position control

Parameter	Name	Range of parameter	Default value	unit	applicable
P-009	Position loop gain	1 ~ 1000	40	1/s	P
P-021	Position loop feedforward gain	0 ~ 127	0	%	P
P-022	Position loop feedforward filter time constant	2 ~ 1000	10	ms	P

Because the position loop includes the speed loop, according to the order of the inner loop and the outer loop, first set the load moment of inertia ratio, then adjust the speed loop gain, speed loop integral time constant, and finally adjust the position loop gain.

The following is the position controller of the system. The increase of the position loop gain Kp can improve the position loop bandwidth, but it is limited by the speed loop bandwidth. To increase the position loop gain, the speed loop bandwidth must be increased first.

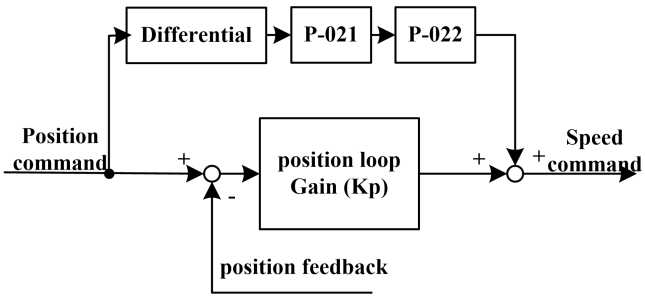

Feedforward can reduce the phase lag of position loop control, reduce position tracking error during position control and shorten positioning time. When the feedforward amount increases, the tracking error of position control decreases, but if it is too large, the system will become unstable and overshoot. If the electronic gear ratio is greater than 10, it is easy to generate noise. In general applications, P-021 can be set to 0%. When high response and low tracking error are required, it can be appropriately increased, but should not exceed 80%. At the same time, it may be necessary to adjust the position loop feedforward filter time constant (parameter P-022).

4.3 Speed Control

Speed control is used in applications that require precise speed control, such as braiding machines, drilling machines, and CNC machining machines. It can also form a position closed-loop control by cooperating with the upper device.

4.3.1 Simple example of speed control

The parameter settings of this example are as follows: (other parameters use the factory default values)

Parameter	Name	Settings	Default value	Parameter Description
P-004	Control Mode	1	0	Set to speed control mode
P-025	Source of speed command	0	0	Set as analog input
P-060	Speed command acceleration time	Set as needed	100	Acceleration time from zero speed to 1000r/min (ms)
P-061	Speed command deceleration time	Set as needed	100	Deceleration time from 1000r/min to zero speed (ms)
P-097	Ignore drive inhibit	0 (use driver disable)	3 (ignore drive inhibit)	Use Forward Drive Disable (CCWL) and Reverse Drive Disable (CWL). If it is set to be ignored, CCWL and CWL may not be connected, see section 4.6 for details.
P-104	Digital input DI5 function	7	20	DI5 is set to zero-speed clamp ZCLAMP
P-110	Digital output DO3 function	6	5	DO3 set to speed to ASP

4.3.2 Parameters related to speed command

The parameters related to the speed command are as follows:

Parameter	Name	Range of parameter	Default value	unit	applicable
P-025	Source of speed command	0 ~ 3	0		S
P-046	Analog speed command gain	10 ~ 3000	300	r/min/V	S
P-047	Analog speed command zero offset compensation	-15000 ~ 15000	0	0.1mv	S
P-048	Analog speed command direction	0 ~ 1	0		S
P-049	Analog speed command filter time constant	2 ~ 500	20	0.1ms	S
P-050	Analog speed command polarity	0 ~ 2	0		S
P-051	Analog speed command dead zone 1	0 ~ 13000	0	mv	S
P-052	Analog speed command dead zone 2	-13000 ~ 0	0	mv	S

Please refer to the description in section 3.6.2 for the operation method of analog zero adjustment. You can also manually set parameter P-047 to adjust the zero offset value according to the input analog value. The analog voltage value received by the drive can be viewed through the following menu items:

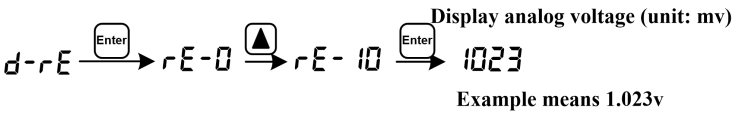

4.3.3 Source of speed command

There are several different sources of speed command, which are set by parameter P-025, as follows:

P-025	Description	Explanation
0	Analog speed command	Ports AS+ and AS- input analog voltage
1	Internal multi-step speed command	Determined by SP1, SP2, and SP3 of DI input [Note 1].
2	< 8 optional P-137~P-144 >	When SP1, SP2, and SP3 are all OFF, it is an analog command, and the rest is determined by SP1, SP2, and SP3 [Note 2].

Note 1: Internal speed command:

DI signal			Speed command
SP3	SP2	SP1	
0	0	0	Internal speed 1 (parameter P-137)
0	0	1	Internal speed 2 (parameter P-138)
0	1	0	Internal speed 3 (parameter P-139)
0	1	1	Internal speed 4 (parameter P-140)
1	0	0	Internal speed 5 (parameter P-141)
1	0	1	Internal speed 6 (parameter P-142)

1	1	0	Internal speed 7 (parameter P-143)
1	1	1	Internal speed 8 (parameter P-144)

Note 2: Analog speed command + internal speed command:

DI signal			Speed command
SP3	SP2	SP1	
0	0	0	Analog speed command
0	0	1	Internal speed 2 (parameter P-138)
0	1	0	Internal speed 3 (parameter P-139)
0	1	1	Internal speed 4 (parameter P-140)
1	0	0	Internal speed 5 (parameter P-141)
1	0	1	Internal speed 6 (parameter P-142)
1	1	0	Internal speed 7 (parameter P-143)
1	1	1	Internal speed 8 (parameter P-144)

The above 0 means OFF and 1 means ON. There are two DI inputs that can provide special functions: CZERO (zero command), CINV (command inversion). When CZERO is ON, the speed command is forced to zero; when CINV is ON, the speed command is inverted.

4.3.4 Acceleration and deceleration control

The acceleration and deceleration control is related to the following parameters:

Parameter	Name	parameter range	Default value	Unit	Applicable
P-060	Speed command acceleration time	0 ~ 30000	100	ms	S
P-061	Speed command deceleration time	0 ~ 30000	100	ms	S

The acceleration and deceleration control can slow down the sudden change of speed and make the motor run smoothly. As shown in the figure below, parameter P-060 sets the acceleration time of the motor from zero speed to 1000r/min, and P-061 sets the deceleration time of the motor from 1000r/min to zero speed. If the drive and the host device form position control, this parameter should be set to 0.

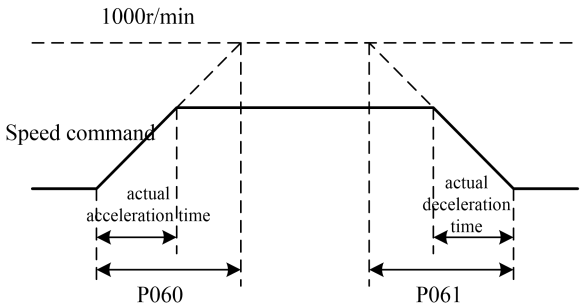

4.3.5 Zero Speed Clamp

The parameters related to the zero speed clamp are as follows:

Parameter	Name	parameter range	Default value	Unit	Applicable

P-160	Zero speed detection point	0～1000	10	r/min	ALL
P-161	Zero speed detection hysteresis	0～1000	5	r/min	ALL
P-162	Zero Speed Clamp Mode	0～1	0		S

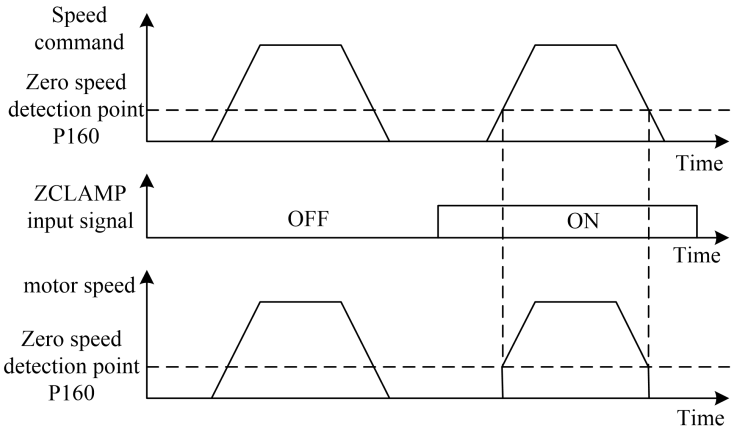

During speed control, even if the motor is at zero speed, the position may change due to rotation by an external force. If it is an analog speed command input, the absolute zero speed command is not easy to achieve. In order to solve these two problems, you can consider using the zero speed clamp function. The zero-speed clamp function is enabled when the following conditions are met:

Condition 1: Speed control mode;

Condition 2: ZCLAMP (zero-speed clamp) in DI is ON;

Condition 3: The speed command is lower than parameter P-160.

When any of the above conditions are not satisfied, normal speed control is performed. The zero-speed clamp has the following two modes:

P-162	description
0	The motor position is fixed at the moment the function is turned on. At this time, the internal position control is connected, and even if the rotation occurs due to external force, it will return to the zero fixed point.
1	When the function is turned on, the speed command is forced to zero speed. The interior is still speed control and may rotate due to external forces.

4.3.6 Gains related to speed control

Parameter	Name	parameter range	Default value	Unit	Applicable
P-005	1st speed loop gain	1 ~ 3000	40	Hz	P,S
P-006	1st speed loop integral time constant	1.0 ~ 1000.0	20.0	ms	P,S
P-018	Speed loop PDFF control coefficient	0 ~ 100	100	%	P,S

First set the load moment of inertia ratio, and then adjust the speed loop gain and speed loop integral time constant. The following is the speed controller of the system. Increasing the speed loop gain Kv can improve the speed response bandwidth, and reducing the speed loop integral time constant Ti can increase the system rigidity and reduce the steady-state error.

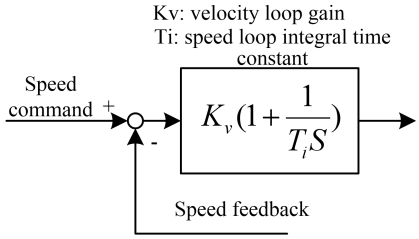

P-018 can choose the speed controller structure, 0 is IP regulator, 100 is PI regulator, 1 ~ 99 is PDFF regulator. If the parameter value of P-018 is too large, the system has a high frequency response, and if the parameter value is too small, the system has high stiffness (resistance to deviation), and the medium value takes into account the frequency response and stiffness.

4.4 Torque Control

Torque control is used in printing machines, winding machines, injection molding machines, etc., and the output torque of the motor is proportional to the input command.

4.4.1 Simple example of torque control

The parameter settings of this example are as follows: (other parameters use the factory default values)

Parameter	Name	Parameter Value	Default Value	Parameter Description
P-004	Control Mode	2	0	set to torque control
P-026	Torque command source	0	0	Set as analog input
P-097	Ignore drive inhibit	0	3	Use Forward Drive Disable (CCWL) and Reverse Drive Disable (CWL). If it is set to be ignored, CCWL and CWL may not be connected, see section 4.6 for details.
P-104	Digital input DI5 function	5	20	DI5 is set to forward torque limit TCCW
P-105	Digital input DI6 function	6	21	DI6 is set to reverse torque limit TCW
P-110	Digital output DO3 function	6	5	DO3 set to speed to ASP

4.4.2 Parameters related to torque command

The parameters related to the torque command are shown in the table below:

Parameter	Name	parameter range	Default value	Unit	Applicable
P-026	Torque command source	0 ~ 2	0		T
P-053	Analog torque command gain	1 ~ 300	30	%/V	T
P-054	Analog torque command zero offset compensation	-1500.0 ~ 1500.0	0.0	mv	T

P-055	Analog torque command direction	0 ~ 1	0		T
P-056	Analog torque command filter time constant	20 ~ 500	20	0.1ms	T
P-057	Analog torque command polarity	0 ~ 2	0		T
P-075	speed limit	0 ~ 6000	3500	r/min	ALL

Please refer to the description in section 3.6.2 for the operation method of analog zero adjustment. You can also manually set parameter P-054 to adjust the zero offset value according to the input analog value. The analog voltage value received by the drive can be viewed through the following menu items:

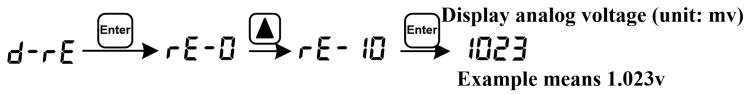

4.4.3 Torque command source

There are several different sources of torque command, which are set by parameter P-026 as follows:

P-026	Description	Explain
0	Analog torque command	Ports AS+ and AS- input analog voltage
1	Internal torque command	Determined by TRQ1 and TRQ2 of DI input [Note 1].
2	Analog torque command + internal torque command	When both TRQ1 and TRQ2 are OFF, it is an analog command, and the rest is determined by TRQ1 and TRQ2 [Note 2].

Note 1: Internal torque command:

DI signal		Torque command
TRQ2	TRQ1	
0	0	Internal torque 1 (parameter P-145)
0	1	Internal torque 2 (parameter P-146)
1	0	Internal torque 3 (parameter P-147)
1	1	Internal torque 4 (parameter P-148)

Note 2: Analog torque command + internal torque command:

DI signal		Torque command
TRQ2	TRQ1	
0	0	Analog torque command
0	1	Internal torque 2 (parameter P-146)
1	0	Internal torque 3 (parameter P-147)
1	1	Internal torque 4 (parameter P-148)

The above 0 means OFF and 1 means ON. There are two DI inputs, CZERO (zero command) and CINV (command inversion), which can provide special functions. When CZERO is ON, the torque is forced to zero; when CINV is ON, the torque command is inverted.

4.5 Gain Adjustment

The driver includes three control loops: current control loop, speed control loop and position control loop. The control block diagram is as follows:

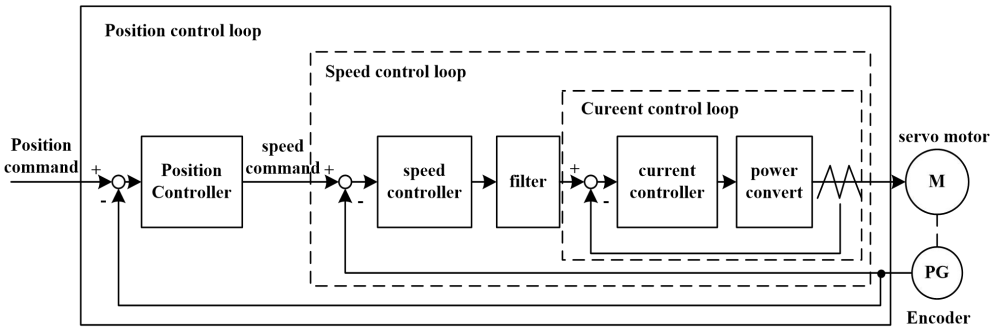

In theory, the control loop bandwidth of the inner layer must be higher than that of the outer layer, otherwise the entire control system will be unstable and cause vibration or poor response. Therefore, the relationship between the three control loop bandwidths is as follows:

Current Loop Bandwidth > Velocity Loop Bandwidth > Position Loop Bandwidth

Since the driver has already adjusted the current control loop to the best state, the user only needs to adjust the parameters of the speed control loop and the position control loop.

4.5.1 Gain Parameters

The parameters related to the control gain are as follows:

Parameter	Name	Parameter range	Default value	Unit	Applicable
P-005	Speed loop gain	1 ~ 3000	50	Hz	P,S
P-006	Speed loop integral time constant	1 ~ 1000	20	ms	P,S
P-009	Position loop gain	1 ~ 1000	40	1/s	P
P-017	Load moment of inertia ratio	1 ~ 2000	10	0.1 倍	P,S
P-007	Torque filter time constant	1 ~ 500	25	0.1ms	ALL
P-019	Speed detection filter time constant	5 ~ 500	25	0.1ms	P,S

The symbols are defined as follows:

Kv: speed loop gain;

Ti: integral time constant of velocity loop;

Kp: position loop gain;

G: Load moment of inertia ratio (P-017);

JL: The moment of inertia of the load converted to the motor shaft;

JM: The moment of inertia of the motor rotor.

1. Speed loop gain Kv

The speed loop gain Kv directly determines the response bandwidth of the speed loop. On the premise that the mechanical system does not generate vibration or noise, if the gain value of the speed loop is increased, the speed response will be accelerated,

and the followability of the speed command will be better. However, an excessively large setting is likely to cause mechanical resonance. The speed loop bandwidth is expressed as:

$$\text{Speed loop bandwidth}(Hz) = \frac{1+G}{1+J_L / J_M} \times K_v(Hz)$$

If the load moment of inertia ratio G is set correctly (G=JL/JM), the speed loop bandwidth is equal to the speed loop gain Kv.

2. Speed loop integral time constant Ti

The speed loop integral can effectively eliminate the speed steady-state error and quickly respond to subtle speed changes. On the premise that the mechanical system does not generate vibration or noise, reduce the integral time constant Ti of the speed loop to increase the rigidity of the system and reduce the steady-state error. If the load inertia ratio is large or the mechanical system has resonance factors, it must be confirmed that the integral time constant of the speed loop is large enough, otherwise the mechanical system is prone to resonance. If the load moment of inertia ratio G is set correctly (G=JL/JM), use the following formula to get the speed loop integral time constant Ti:

$$T_i(ms) \geq \frac{4000}{2\pi \times K_V(Hz)}$$

3. Position loop gain Kp

The position loop gain directly determines the response speed of the position loop. On the premise that the mechanical system does not generate vibration or noise, increase the gain value of the position loop to speed up the response speed, reduce the position tracking error, and shorten the positioning time. But too large setting will cause mechanical system jitter or positioning overshoot. The position loop bandwidth cannot be higher than the speed loop bandwidth.

$$\text{Location loop bandwidth}(Hz) \leq \frac{\text{Speed loop bandwidth(Hz)}}{4}$$

If the load moment of inertia ratio G is set correctly (G=JL/JM), the position loop gain Kp is calculated as follows:

$$K_p(1/s) \leq 2\pi \times \frac{K_v(Hz)}{4}$$

4.5.2 Gain Adjustment Procedure

The choice of position and speed bandwidth must be determined by the rigidity of the machine and the application. The conveying machine connected by the belt has low rigidity and can be set to a lower bandwidth; the mechanical rigidity of the ball screw driven by the reducer is medium and can be set to Medium bandwidth; direct drive ball screw or linear motor with high stiffness and can be set to high bandwidth. If the mechanical characteristics are unknown, gradually increase the gain to increase the bandwidth until resonance, and then lower the gain.

In servo gain, if one parameter is changed, other parameters also need to be readjusted. Please don't make major changes to just one parameter. Regarding the steps for changing the servo parameters, generally please observe the following principles:

Improve responsiveness	Reduces response, suppresses vibration and overshoot
1.Increase speed loop gain Kv (P-005) 2. Decrease the integral time constant Ti of the speed loop (P-006) 3. Increase the position loop gain Kp (P-009)	1. Reduce the position loop gain Kp (P-009) 2. Increase the integral time constant Ti of the speed loop (P-006) 3. Decrease the speed loop gain Kv (P-005)

Gain Adjustment Procedure for Speed Control

1. Set the load inertia moment ratio (P-017).
2. Set the speed loop integral time constant (P-006) to a larger value.
3. Increase the speed loop gain (P-005) within the range where no vibration or abnormal sound occurs, and slightly decrease it if vibration occurs.
4. The integral time constant of the speed loop should be reduced within the range where no vibration occurs. If vibration occurs, it will be slightly increased.
5. If the gain cannot be increased due to resonance in the mechanical system, and the desired responsiveness cannot be obtained, adjust the torque low-pass filter (P-007) or the speed detection filter (P-019) to suppress the resonance. , then repeat the above steps to improve responsiveness.

Gain Adjustment Procedure for Position Control

1. Set the load inertia moment ratio (P-017).
2. Set the speed loop integral time constant (P-006) to a larger value.
3. Increase the speed loop gain (P-005) within the range where no vibration or abnormal sound occurs, and slightly decrease it if vibration occurs.
4. The integral time constant of the speed loop should be reduced within the range where no vibration occurs. If vibration occurs, it will be slightly increased.
5. Increase the position loop gain (P-009), and reduce it slightly if vibration occurs.
6. If the gain cannot be increased due to resonance in the mechanical system, and the desired responsiveness cannot be obtained, adjust the torque low-pass filter (P-007) or the speed detection filter (P-019) to suppress the resonance. , then repeat the above steps to improve responsiveness.
7. If shorter positioning time and smaller position tracking error are required, position feedforward (P-021, P-022) can be adjusted appropriately.

4.6 Overtravel Protection

The overtravel protection function refers to the safety function that when the moving part of the machine exceeds the designed safe moving range, the limit switch acts to force the motor to stop. The schematic diagram of overtravel protection is as follows:

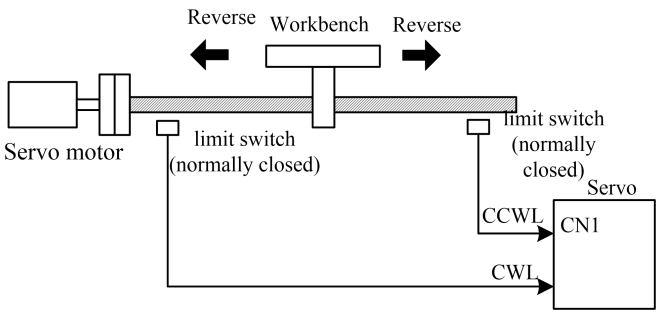

It is recommended to use a normally closed contact for the limit switch, which is closed within a safe range and disconnected when overtravel. It is connected to forward drive prohibition (CCWL) and reverse drive prohibition (CWL). It can also be set to use and ignore through parameter P-097. If it is set to use, the limit signal must be connected; if it is set to ignore, the signal is not required. The default value of the parameter is that both CCWL and CWL are ignored. If you need to use it, you must modify the parameter P-097. Even in the overtravel state, it is still allowed to exit the overtravel state by inputting the reverse command.

P-097	Reverse Drive Disable (CWL)	Forward Drive Disable (CCWL)
0	Enable	Enable
1	Enable	Disable
2	Disable	Enable
3(Default)	Disable	Disable

4.7 Working timing

4.7.1 Power-on sequence

After the main power is turned on, after a delay of about 1.5 seconds, the servo ready signal (SRDY) is ON. At this time, the servo enable (SON) signal can be accepted. When the servo enable is detected to be valid, the power circuit is turned on, the motor is excited, and it is running. state. It is detected that the servo enable is invalid or there is an alarm, the power circuit is turned off, and the motor is in a free state.

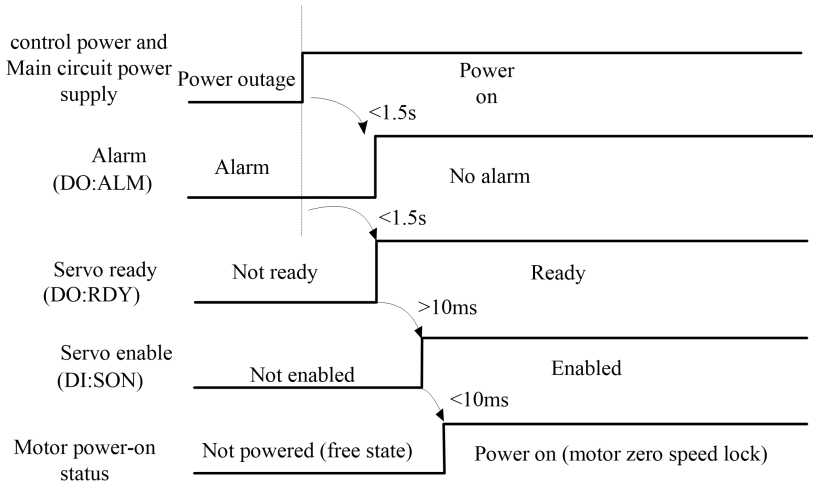

4.7.2 Alarm sequence when servo ON

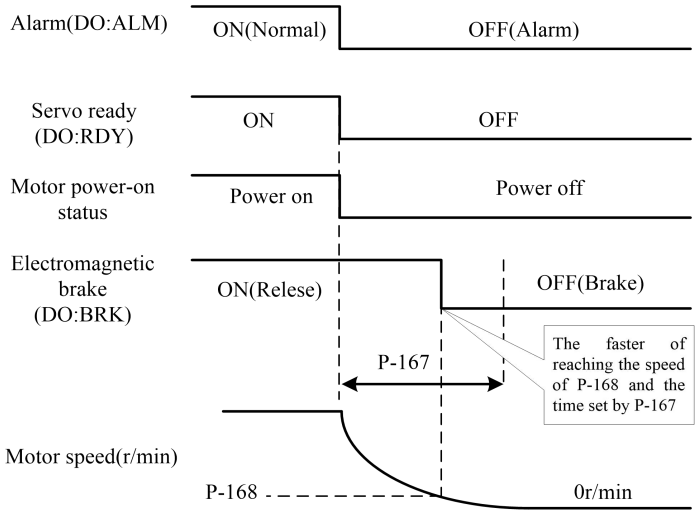

4.7.3 The action sequence of electromagnetic brake when the motor is stationary

When the motor speed is lower than the parameter P-165, the electromagnetic brake action sequence:

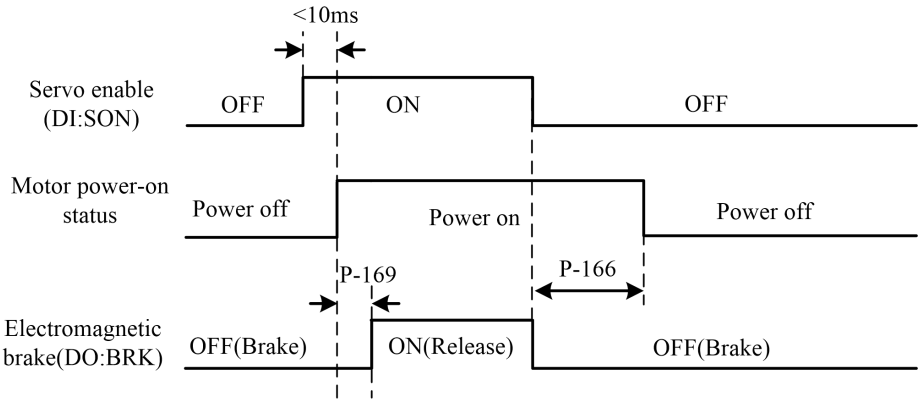

4.7.4 The action sequence of electromagnetic brake when the motor is running

When the motor speed is higher than the parameter P165, the electromagnetic brake action sequence:

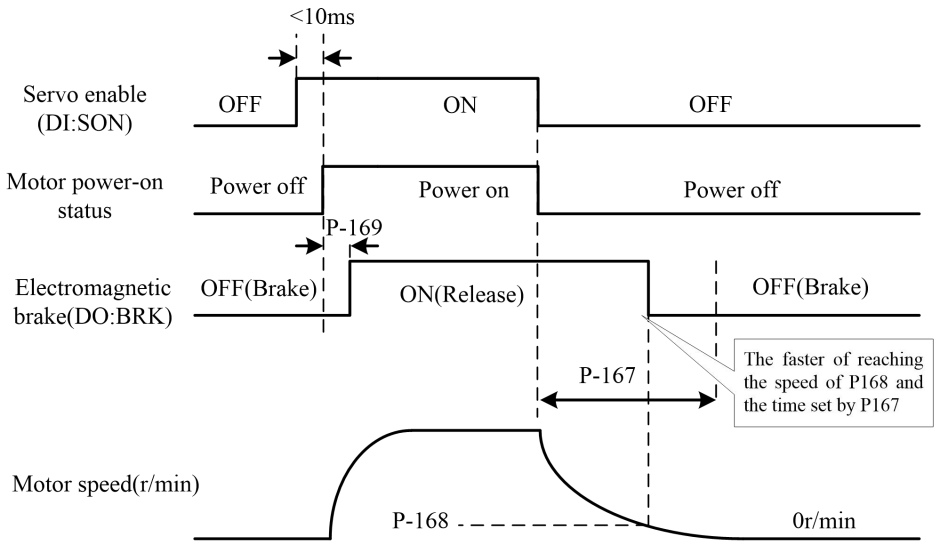

4.8 Electromagnetic brake

Electromagnetic brakes (holding brakes, power-off brakes) are used to lock the vertical or inclined worktable connected to the motor to prevent the worktable from falling after the servo power is lost. To achieve this function, it is necessary to purchase a motor with a brake. Brakes should only be used to hold the table and must never be used to slow down and stop machine motion.

4.8.1 Electromagnetic brake parameters

Electromagnetic brake related parameters:

Parameter	Name	parameter range	Default value	Unit	Applicable
P-165	Motor standstill speed detection point	0～1000	5	r/min	ALL
P-166	Electromagnetic brake delay time when the motor is stationary	0～2000	300	ms	ALL
P-167	Electromagnetic brake waiting time when the motor is running	0～2000	500	ms	ALL
P-168	Electromagnetic brake action speed when the motor is running	0～3000	100	r/min	ALL
P-169	Delay time for electromagnetic brake release	0～3000	300	ms	ALL

4.8.2 Use of electromagnetic brake

The following figure is the wiring diagram of the brake. The brake release signal BRK of the driver is connected to the relay coil, and the relay contact is connected to the brake power supply. Brake power is provided by the user and has sufficient capacity. It is recommended to install a surge absorber to suppress surge voltage caused by relay on/off action. Diodes can also be used as surge absorbers, but it should be noted that it will cause a little braking delay.

After the motor stops and stops (the speed is less than P-165), the servo is OFF. At this time, the motor continues to energize to maintain the position. After the brake is stable for a period of time (the time is determined by parameter P-166), the power supply to the motor is removed.

When the motor is running (the speed is greater than P-165), the servo is OFF. At this time, the motor current is cut off, and the brake continues to be released. After a delay for a period of time, the brake is braked. This is to decelerate the motor from a high-speed rotation state to a low speed, and then activate the mechanical brake to avoid damage to the brake. The delay time is the time required for parameter P-167 or the motor speed to decelerate to the speed of parameter P-168, whichever is the smallest.

P-169: When the system changes from the disabled state to the enabled state, it defines the delay time from the opening of the motor current to the release of the electromagnetic brake (DO output terminal BRK ON).

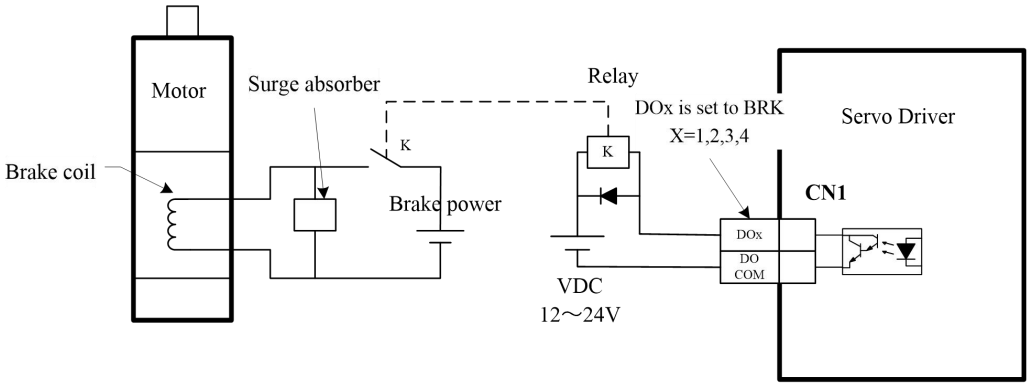

Chapter 5 Parameters

5.1 List of parameters

The applicable column indicates the applicable control mode, P is for position control, S is for speed control, T is for torque control, and All is applicable for position, speed and torque control. A parameter value of "*" indicates that the factory default value may be different.

5.1.1 0 segment parameters

Parameter	Name	Parameter range	Default value	Unit	Applicable
P-000	Operation Password	0 ~ 9999	315		ALL
P-001	Drive Model Code	*	*		ALL
P-002	Motor Code	*	*		ALL
P-003	Software version	*	*		ALL
P-004	Control Mode	0 ~ 8	0		ALL
P-005	1st speed loop gain	1 ~ 3000	50	Hz	P,S
P-006	1st speed loop integral time constant	1 ~ 1000	20	ms	P,S
P-007	1st torque filter time constant	1 ~ 500	25	0.1ms	ALL
P-009	1st position loop gain	1 ~ 1000	40	1/s	P
P-019	Speed detection filter time constant	5 ~ 500	35	0.1ms	P,S
P-021	Position loop feedforward gain	0 ~ 100	0	%	P
P-022	Position loop feedforward filter time constant	2 ~ 500	10	0.1ms	P
P-025	Source of speed command	0 ~ 3	0		S
P-026	Torque command source	0 ~ 2	0		T
P-029	Position command pulse electronic gear 1st numerator	1 ~ 32767	1		P
P-030	Position command pulse electronic gear denominator	1 ~ 32767	1		P
P-031	Command pulse electronic gear second numerator	1 ~ 32767	1		P
P-032	Command pulse electronic gear 3rd numerator	1 ~ 32767	1		P
P-033	Command pulse electronic gear 4th numerator	1 ~ 32767	1		P
P-035	Position command pulse mode	0 ~ 2	0		P
P-036	Position command pulse input direction	0 ~ 1	0		P
P-037	Position command pulse input signal logic	0 ~ 3	0		P
P-038	Position command pulse signal filter coefficient	0 ~ 15	2		P
P-039	Position command direction signal filter coefficient	0 ~ 3	0		P
P-040	Position command exponential smoothing filter time	0 ~ 5000	0	ms	P
P-046	Analog speed command gain	10 ~ 3000	300	r/min/V	S
P-047	Analog speed command zero offset compensation	-15000 ~ 15000	0	0.1mv	S
P-048	Analog speed command direction	0 ~ 1	0		S
P-049	Analog speed command filter time constant	2 ~ 500	20	0.1ms	S
P-050	Analog speed command polarity	0 ~ 2	0		S
P-051	Analog speed command dead zone 1	0 ~ 13000	0	mv	S
P-052	Analog speed command dead zone 2	-13000 ~ 0	0	mv	S

Parameter	Name	Parameter range	Default value	Unit	Applicable
P-053	Analog torque command gain	1 ~ 300	30	%/V	T
P-054	Analog torque command zero offset compensation	1500 ~ 1500	0	mv	T
P-055	Analog torque command direction	0 ~ 1	0		T
P-056	Analog torque command filter time constant	2 ~ 500	20	0.1ms	T
P-057	Analog torque command polarity	0 ~ 2	0		T
P-060	Speed command acceleration time	0 ~ 10000	100	ms	S
P-061	Speed command deceleration time	0 ~ 10000	100	ms	S
P-063	EMG (emergency stop)/ALM deceleration time	0 ~ 10000	1000	ms	ALL
P-064	Torque limit selection	0 ~ 2	0		ALL
P-065	Internal forward rotation (CCW) torque limit	0 ~ 300	300	%	ALL
P-066	Internal reverse rotation (CW) torque limit	-300 ~ 0	-300	%	ALL
P-067	External forward rotation (CCW) torque limit	0 ~ 300	100	%	ALL
P-068	External reverse rotation (CW) torque limit	-300 ~ 0	-100	%	ALL
P-069	Test run torque limit	0 ~ 300	100	%	ALL
P-070	Forward rotation (CCW) torque overload alarm level	1 ~ 300	140	%	ALL
P-071	Reverse (CW) torque overload alarm level	-300 ~ -1	-140	%	ALL
P-072	Torque overload alarm detection time	1 ~ 30000	5000	ms	ALL
P-075	Maximum speed limit	0 ~ 6000	3500	r/min	ALL
P-076	JOG running speed	0 ~ 5000	100	r/min	S
P-077	Speed limit selection	0 ~ 2	0		T
P-078	Speed limit during torque control	0 ~ 5000	1000	r/min	T
P-079	Speed limit error during torque control	1 ~ 5000	100	r/min	T
P-080	Position out-of-tolerance detection	0 ~ 32767	400	0.01 圈	P
P-081	First encoder type selection	0~1	0		ALL
P-082	Number of lines of the first encoder	1~32767	2500	pulse	ALL
P-083	Motor encoder zero offset angle	-3600~3600	-23.0	degree	ALL
P-084	Motor encoder control parameter	0～11111	0		ALL
P-097	Positive and negative limit use mode / positive and negative control	0 ~ 33	33		ALL
P-098	Force enable	0~1	0		ALL
P-099	Motor series code	0~15	0		ALL

5.1.2 1st segment parameters

Parameter	Name	Parameter range	Default value	Unit	Applicable
P-100	Digital input DI1 function	-21～21	1		ALL
P-101	Digital input DI2 function	-21～21	2		ALL
P-102	Digital input DI3 function	-21～21	3		ALL
P-103	Digital input DI4 function	-21～21	4		ALL
P-104	Digital input DI5 function	-21～21	20		ALL
P-105	Digital input DI6 function	-21～21	21		ALL

Parameter	Name	Parameter range	Default value	Unit	Applicable
P-108	Digital output DO1 function	-12～12	2		ALL
P-109	Digital output DO2 function	-12～12	3		ALL
P-110	Digital output DO3 function	-12～12	5		ALL
P-111	Digital output DO4 function	-12～12	8		ALL
P-120	Digital input DI forced valid parameter1	00000～11111	00000		ALL
P-121	Digital input DI forced valid parameter 2	00000～11111	00000		ALL
P-122	Digital input DI forced valid parameter 3	00000～11111	00000		ALL
P-123	Digital input DI forced valid parameter 4	00000～11111	00000		ALL
P-124	Digital input DI forced valid parameter 5	00000～11111	00000		ALL
P-125	Digital input DIx filtering	1～1000	5	ms	ALL
P-136	stop mode when servo disable or an alarm occurs	0～1	0		ALL
P-137	Internal speed 1	-5000～5000	0	r/min	S
P-138	Internal speed 2	-5000～5000	0	r/min	S
P-139	Internal speed 3	-5000～5000	0	r/min	S
P-140	Internal speed 4	-5000～5000	0	r/min	S
P-141	Internal speed 5	-5000～5000	0	r/min	S
P-142	Internal speed 6	-5000～5000	0	r/min	S
P-143	Internal speed 7	-5000～5000	0	r/min	S
P-144	Internal speed 8	-5000～5000	0	r/min	S
P-145	Internal torque 1	-300～300	0	%	T
P-146	Internal torque 2	-300～300	0	%	T
P-147	Internal torque 3	-300～300	0	%	T
P-148	Internal torque 4	-300～300	0	%	T
P-150	Positioning complete range	0～32767	10	pulse	P
P-151	Positioning complete hysteresis	0～32767	5	pulse	P
P-152	Positioning proximity range	0～32767	500	pulse	P
P-153	Positioning close to hysteresis	0～32767	50	pulse	P
P-154	Arrival speed	-5000～5000	500	r/min	ALL
P-155	Arrival speed hysteresis	0～5000	30	r/min	ALL
P-156	Arrival velocity polarity	0～1	0		ALL
P-157	Arrival torque	-300～300	100	%	ALL
P-158	Reaching torque hysteresis	0～300	5	%	ALL
P-159	Arrival torque polarity	0～1	0		ALL
P-160	Zero speed detection point	0～1000	10	r/min	ALL
P-161	Zero speed detection hysteresis	0～1000	5	r/min	ALL
P-162	Zero Speed Clamp Mode	0～1	0		S
P-164	emergency stop mode	0～1	0		P
P-165	Motor standstill speed detection point	0～1000	5	r/min	ALL
P-166	Electromagnetic brake delay time when the motor is stationary	0～5000	500	ms	ALL
P-167	Electromagnetic brake waiting time when the motor is running	0～5000	500	ms	ALL
P-168	Electromagnetic brake action speed when the motor is running	0～3000	100	r/min	ALL
P-169	Delay time for electromagnetic brake opening	0～5000	500	ms	ALL

5.1.3 2-segment parameters (part)

Parameter	Name	Parameter range	Default value	Unit	Applicable
P-201	Motor pole pairs	1～50	4		ALL
P-204	Motor rated current	1～4000	6.0	A	ALL

P-207	Motor rated speed	1～30000	2500	r/min	ALL

5.2 List of DI functions

Serial number	Symbol	DI function	Serial number	Symbol	DI function
0	NULL	No function	14	TRQ2	Internal torque selection 2
1	SON	Servo enable	15	EMG	emergency shutdown
2	ACLR	Alarm clear	16	CMODE	control mode switch
3	CCWL	Forward drive prohibited	17	GAIN	Gain switching
4	CWL	Reverse drive prohibited	18	GEAR1	Electronic gear selection 1
5	TCCW	Forward torque limit	19	GEAR2	Electronic gear selection 2
6	TCW	Reverse torque limit	20	CLE	Position deviation clear
7	ZCLAMP	Zero speed clamp	21	INH	Pulse input prohibited
8	CZERO	zero command			
9	CINV	instruction negation	23	CCW	Forward running (start)
10	SP1	Internal speed selection 1	24	CW	run in reverse
11	SP2	Internal speed selection 2			
12	SP3	Internal speed selection 3			
13	TRQ1	Internal torque selection 1			

5.3 List of DO functions

Serial number	Symbol	DI function	Serial number	Symbol	DI function
0	OFF	always invalid	8	BRK	Electromagnetic brake
1	ON	always valid	9	RUN	Servo running
2	SRDY	Servo Ready	10	NEAR	positioning approach
3	ALM	Servo Alarm	11	TRQL	torque limit
4	ZSP	Zero Speed	12	SPL	speed limit
5	COIN	Positioning completed	14	PtoS	Position/speed mode switching completed
6	ASP	Speed Arrive	15	PtoT	Position/torque mode switching completed
7	ATRQ	Torque Arrive	16	StoT	Speed/torque mode switching completed
			20	DO3_ZOUT	Z signal output (only DO3 supports this function)

5.4 Detailed explanation of parameters

5.4.1 0 segment parameters

P-000	Operation Password	Range	Default	Unit	Applicable
		0 ~ 9999	315		ALL

Hierarchical management of parameters can ensure that parameters will not be modified by mistake. Some special operations need to set a proper password.

P-001 driver code, P-002 motor code, P-099 motor series code, P-000 should be set to 385 (or 316) when modifying, otherwise the modification will be invalid.

P-001	Driver Code	Range	Default	Unit	Applicable
		*	*		ALL

The current drive model. It has been set at the factory and cannot be modified by the user. 1: L20 (220V, 0.75kW) 2: L30 (220V, 1.5kW) 3: L40 (220V, 2.5kW)

P-002	Motor Code	Range	Default	Unit	Applicable
		*	*		ALL

For the current motor model, please set it according to the actual motor model used. For the meaning of the parameters, see the motor adaptation table in chapter 7.2.

When replacing different types of motors, this parameter needs to be modified. For details, please refer to chapter 3.7.

P-003	Software version	Range	Default	Unit	Applicable
		*	*		ALL

The software version number, which cannot be modified.

P-004	Control Mode	Range	Default	Unit	Applicable
		0 ~ 8	0		ALL

Parameter meaning:

0: Position control mode; 1: Speed control mode; 2: Torque control mode;
3: position/speed mode; 4: position/torque mode; 5: speed/torque mode;

When set to 3, 4, and 5, the specific control method is determined by the CMODE of the DI input:

P-004	CMODE[Note]	Control Mode
3	0	position control
	1	speed control
4	0	position control
	1	Torque control
5	0	speed control
	1	Torque control

Note: 0 means OFF, 1 means ON.

P-005	1st speed loop gain	Range	Default	Unit	Applicable
		1 ~ 3000	50	Hz	P,S

The proportional gain of the speed regulator, increasing the parameter value can make the speed response quicker, and it is easy to cause vibration and noise if it is too large.

P-006	1st speed loop integral time constant	Range	Default	Unit	Applicable
		1～1000	20	ms	P,S

The integral time constant of the speed regulator, reducing the parameter value, can reduce the speed control error and increase the rigidity, and it is easy to cause vibration and noise if it is too small.

P-007	1st torque filter time constant	Range	Default	Unit	Applicable
		1～500	35	0.1ms	ALL

The low-pass filter of torque can restrain vibration caused by machinery.

The larger the value, the better the effect of suppressing vibration. If the value is too large, the response will be slow, which may cause oscillation; the smaller the value, the faster the response, but it is limited by mechanical conditions.

When the load inertia is small, a small value can be set, and when the load inertia is large, a large value can be set.

P-009	1st position loop gain	Range	Default	Unit	Applicable
		1～1000	40	1/s	P

Proportional gain of the position regulator; increasing the parameter value can reduce the position tracking error and improve the response. If it is too large, it may cause overshoot or oscillation.

P-019	Speed detection filter time constant	Range	Default	Unit	Applicable
		5～500	35	0.1ms	P,S

The larger the parameter value, the smoother the detection. The smaller the parameter value, the faster the detection response. If it is too small, it may cause noise; if it is too large, it may cause oscillation.

P-021	Position loop feedforward gain	Range	Default	Unit	Applicable
		0 ~ 100	0	%	P

Feedforward can reduce the position tracking error during position control. When it is set to 100, the position tracking error is always 0 under the command pulse of any frequency.

When the parameter value increases, the response of the position control is improved. If the parameter value is too large, the system will be unstable and oscillation will occur easily.

P-022	Position loop feedforward filter time constant	Range	Default	Unit	Applicable
		2 ~ 500	10	0.1ms	P

The function of filtering the feedforward amount of the position loop is to increase the stability of the feedforward control.

P-025	Source of speed command	Range	Default	Unit	Applicable
		0 ~ 5	0		S

During speed control, set the source of speed command.

Parameter meaning:

0: Analog speed 1: Internal multi-speed < 8 optional P137~P144 >

2: Analog + internal multi-speed 3: Puls Speed/Internal Test Speed < P-020 >

The specific meanings are as follows:

0: Analog speed command, input from analog ports AS+ and AS-.

1: Internal speed command, determined by SP1, SP2, SP3 of DI input:

DI signal [Note]			Speed command
SP3	SP2	SP1	
0	0	0	Internal speed 1 (parameter P137)
0	0	1	Internal speed 2 (parameter P138)
0	1	0	Internal speed 3 (parameter P139)
0	1	1	Internal speed 4 (parameter P140)
1	0	0	Internal speed 5 (parameter P141)
1	0	1	Internal speed 6 (parameter P142)
1	1	0	Internal speed 7 (parameter P143)
1	1	1	Internal speed 8 (parameter P144)

Note: 0 means OFF, 1 means ON.

2: Analog speed command + internal speed command:

DI signal [Note]			Speed command
SP3	SP2	SP1	
0	0	0	Analog speed command
0	0	1	Internal speed 2 (parameter P138)
0	1	0	Internal speed 3 (parameter P139)
0	1	1	Internal speed 4 (parameter P140)
1	0	0	Internal speed 5 (parameter P141)
1	0	1	Internal speed 6 (parameter P142)

1	1	0	Internal speed 7 (parameter P143)
1	1	1	Internal speed 8 (parameter P144)

Note: 0 means OFF, 1 means ON.

P-026	Torque command source	Range	Default	Unit	Applicable
		0 ~ 2	0		T

During torque control, set the source of torque command.

Parameter meaning:

0: Analog torque command, input from analog ports AS+ and AS-.

1: Internal torque command, determined by TRQ1 and TRQ2 input by DI:

DI signal [Note]		Torque command
TRQ2	TRQ1	
0	0	Internal torque 1 (parameter P145)
0	1	Internal torque 2 (parameter P146)
1	0	Internal torque 3 (parameter P147)
1	1	Internal torque 4 (parameter P148)

Note: 0 means OFF, 1 means ON.

2: Analog torque command + internal torque command;

DI signal [Note]		Torque command
TRQ2	TRQ1	
0	0	Analog torque command
0	1	Internal torque 2 (parameter P146)
1	0	Internal torque 3 (parameter P147)
1	1	Internal torque 4 (parameter P148)

Note: 0 means OFF, 1 means ON.

P-029	Position command pulse electronic gear 1st numerator	Range	Default	Unit	Applicable
		1 ~ 32767	1		P

P-030	Position command pulse electronic gear denominator	Range	Default	Unit	Applicable
		1 ~ 32767	1		P

It is used to divide or multiply the frequency of the input pulse, which can be easily matched with various pulse sources to achieve the pulse resolution required by the user.

The numerator N of the command pulse electronic gear is set by parameter P029, and the denominator M is set by parameter P030.

The input pulse command gets the position command through N/M change.

P-031	Position command pulse electronic gear second numerator	Range	Default	Unit	Applicable
		1 ~ 32767	1		P

Refer to the description of parameters P029 and P030.

P-032	Position command pulse electronic gear 3rd numerator	Range	Default	Unit	Applicable
		1 ~ 32767	1		P

Refer to the description of parameters P029 and P030.

P-033	Position command pulse electronic gear 4th numerator	Range	Default	Unit	Applicable
		1 ~ 32767	1		P

Refer to the description of parameters P029 and P030.

During position control, set the source of position command and the application mode of dynamic electronic gear.

Parameter meaning:

Tens digit: Set position command

0: External pulse 1: Internal digital quantity

One digit: Set the dynamic electronic gear application mode (see the description in chapter 4.2.3 for details)

0: The use of dynamic electronic gear ratio switching is prohibited, and the numerator of the command pulse electronic gear is set by P029

1: Dynamic electronic gear ratio switching is allowed, and the command pulse electronic gear numerator is determined by GEAR1 input from DI

2: Dynamic electronic gear ratio switching is allowed, and the command pulse electronic gear numerator is determined by GEAR1 and GEAR2 input by DI

P-035	Position command pulse input method	Range	Default	Unit	Applicable
		0 ~ 2	0		P

Set the command pulse input mode, parameter meaning:

0: Pulse + direction

1: Forward/reverse pulse

2: Quadrature Pulse (A/B)

Pulse command format	Forward rotation (CCW)	Reverse (CW)	Parameter P035
pulse + direction	PULS SIGN		0
Forward/reverse pulse	PULS SIGN		1
quadrature pulse	PULS SIGN		2

Note: The arrow represents the counting edge, and the parameters are set to P036=0, P037=0.

Command pulse input block diagram.

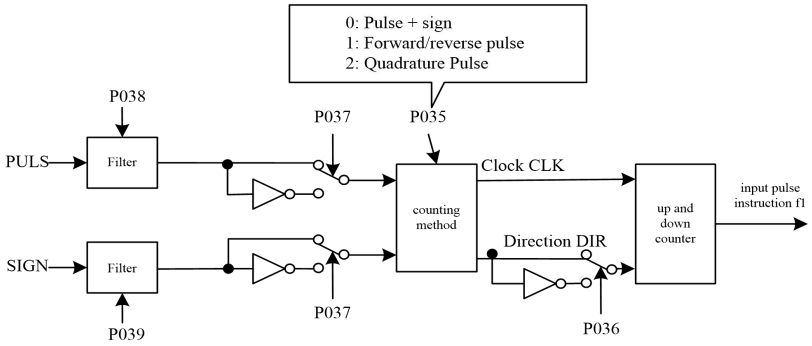

After the parameter is modified, it must be saved, and it will be valid after re-powering on.

P-036	Position command pulse input direction	Range	Default	Unit	Applicable
		0 ~ 1	0		P

Parameter meaning:

0: Normal direction 1: Reverse direction

P-037	Position command pulse input signal logic	Range	Default	Unit	Applicable
		0 ~ 3	0		P

Set the phase of the pulse input signal PULS and SIGN signal to adjust the counting edge and counting direction.

P037	PULS signal phase SIGN signal phase	PULS signal phase SIGN signal phase
0	in phase	in phase
1	Invert	in phase
2	in phase	Invert
3	Invert	Invert

After the parameter is modified, it must be saved, and it will be valid after re-powering on.

P-038	Position command pulse signal filter coefficient	Range	Default	Unit	Applicable
		0 ~ 3	0		P

Digitally filter the pulse input signal PULS, the larger the value, the larger the filter time constant.

By default, the maximum pulse input frequency is 500kHz (kpps). The larger the value is, the lower the maximum pulse input frequency will be.

Used to filter out the noise on the signal line to avoid counting errors. If there is a phenomenon of inaccurate walking due to inaccurate counting, the parameter value can be appropriately increased.

The timing lead or lag of pulse and direction signals can be adjusted.

After the parameter is modified, it must be saved, and it will be valid after re-powering on.

P-039	Position command direction signal filter coefficient	Range	Default	Unit	Applicable
		0 ~ 3	0		P

Digitally filter the pulse direction signal SIGN. The larger the value, the larger the filter time constant.

After the parameter is modified, it must be saved, and it will be valid after re-powering on.

The timing lead or lag of pulse and direction signals can be adjusted.

After the parameter is modified, it must be saved, and it will be valid after re-powering on.

P-040	Position command exponential smoothing filter time	Range	Default	Unit	Applicable
		0 ~ 5000	0	ms	P

Smooth and filter the command pulse, with exponential acceleration and deceleration. The filter will not lose input pulses, but there will be an instruction delay phenomenon. When set to 0, the filter does not work.

This filter is used for:

1. The host controller has no acceleration and deceleration function;
2. The electronic gear ratio is large (N/M>10);
3. The command frequency is low;
4. When the motor is running, the step jumps and the instability occurs.

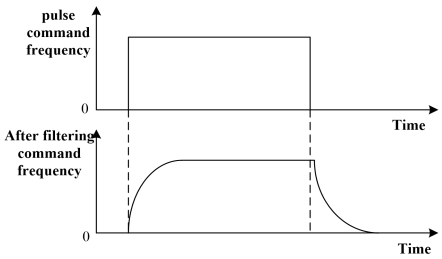

P-046	Analog speed command gain	Range	Default	Unit	Applicable
		10 ~ 3000	300	r/min/V	S

Set the proportional relationship between the analog speed input voltage and the actual running speed of the motor.

The analog input range is -10V~10V.

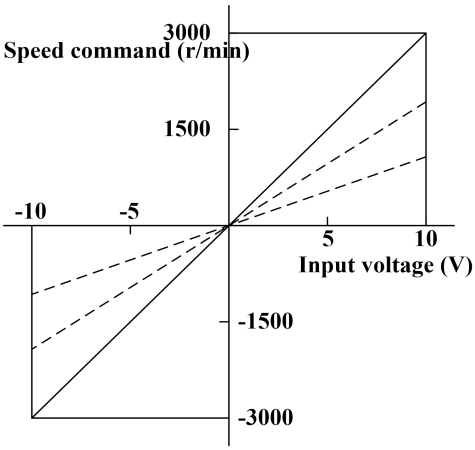

P-047	Analog speed command zero offset compensation	Range	Default	Unit	Applicable
		-15000 ~ 15000	0	0.1mv	S

For the zero offset compensation of analog speed input, the actual speed command is the input analog value minus this parameter value.

The analog auto-zero function can be used, this parameter is set automatically, refer to chapter 3.6.2.

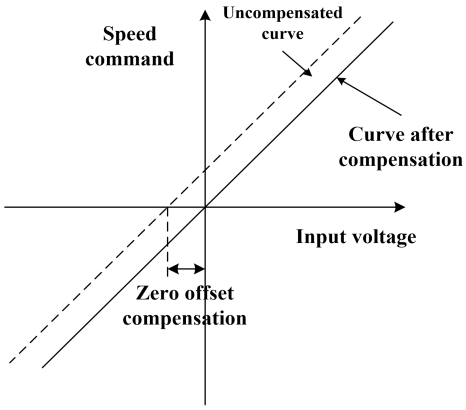

P-048	Analog speed command direction	Range	Default	Unit	Applicable
		0 ~ 1	0		S

Parameter meaning:

P048	Positive polarity (positive voltage) analog input	Negative polarity (negative voltage) analog input
0	Forward rotation (CCW) speed command	Reverse (CW) speed command
1	Reverse (CW) speed command	Forward rotation (CCW) speed command

P-049	Analog speed command filter time constant	Range	Default	Unit	Applicable
		2 ~ 500	20	0.1ms	S

Low-pass filter for analog speed input.

The larger the setting, the slower the input analog response speed, which is beneficial to reduce the interference of high-frequency noise; the smaller the setting, the faster the response speed, but the greater the interference of high-frequency noise.

P-050	Analog speed command polarity	Range	Default	Unit	Applicable
		0 ~ 2	0		S

Parameter meaning:

0: Bipolar.

1: Single positive polarity. Input positive polarity is valid, when negative polarity is forced to 0.

2: Single-negative polarity. Negative input polarity is valid, when positive polarity is forced to 0.

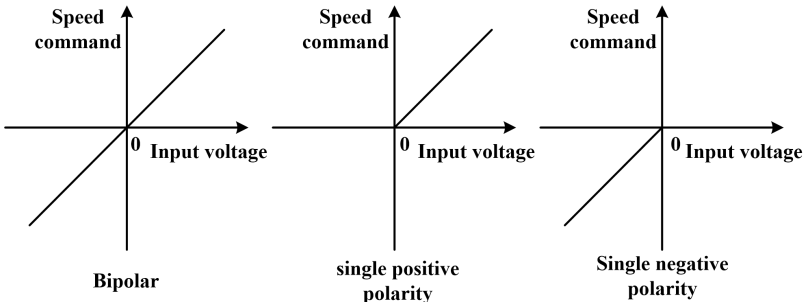

P-051	Analog speed command dead zone 1	Range	Default	Unit	Applicable
		0 ~ 13000	0	mv	S

When the input voltage is between dead zone 2 (parameter P-052) and dead zone 1 (parameter P-051), the command is forced to be 0.

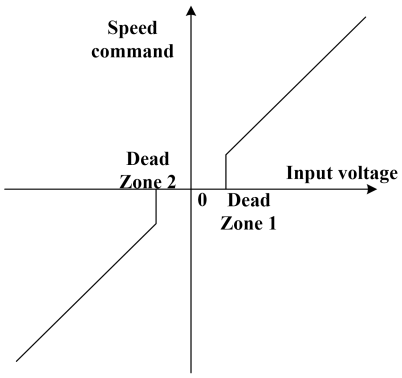

P-052	Analog speed command dead zone 2	Range	Default	Unit	Applicable
		-13000 ~ 0	0	mv	S

Refer to the description of parameter P-051.

P-053	Analog torque command gain	Range	Default	Unit	Applicable
		1 ~ 300	30	%/V	T

Set the proportional relationship between the analog torque input voltage and the actual running torque of the motor. The unit of the set value is the rated torque 1%/V;

The analog input range is -10V~10V.

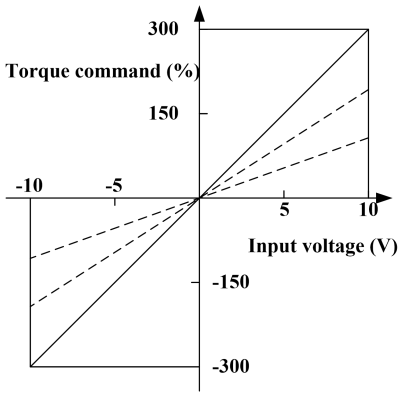

P-054	Analog torque command zero offset compensation	Range	Default	Unit	Applicable
		-1500 ~ 1500	0	mv	T

For the zero offset compensation of analog torque input, the actual torque command is the input analog value minus this parameter value.

The analog auto-zero function can be used, this parameter is set automatically, refer to chapter 3.6.2.

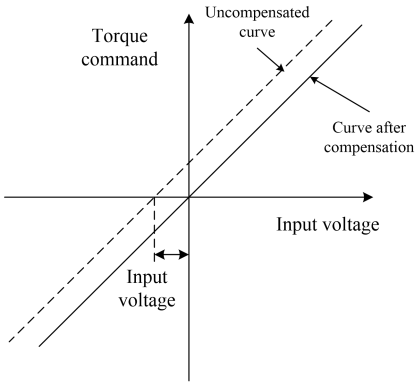

P-055	Analog torque command direction	Range	Default	Unit	Applicable
		0 ~ 1	0		T

Parameter meaning:

P055	Positive polarity (positive voltage) analog input	Negative polarity (negative voltage) analog input
0	Forward rotation (CCW) torque command	Reverse (CW) torque command
1	Reverse (CW) torque command	Forward rotation (CCW) torque command

P-056	Analog torque command filter time constant	Range	Default	Unit	Applicable
		2 ~ 500	20	0.1ms	T

Low-pass filter coefficient of analog torque input.

The larger the setting, the slower the input analog response speed, which is beneficial to reduce the high frequency noise interference; the smaller the setting, the faster the response speed, but the high frequency noise interference is large.

P-057	Analog torque command polarity	Range	Default	Unit	Applicable
		0 ~ 2	0		T

Parameter meaning:

0: Bipolar.

1: Single positive polarity. Input positive polarity is valid, when negative polarity is forced to 0.

2: Single-negative polarity. Negative input polarity is valid, when positive polarity is forced to 0.

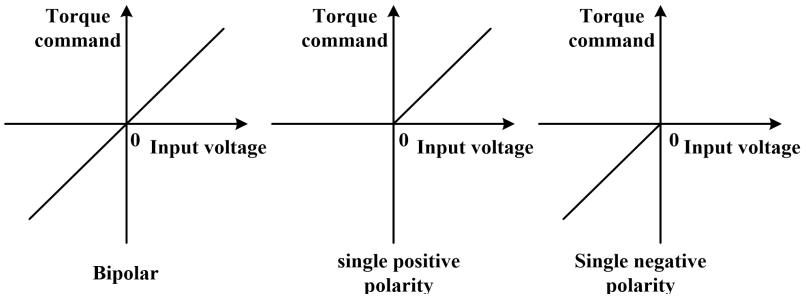

P-060	Speed command acceleration time	Range	Default	Unit	Applicable
		0 ~ 10000	100	ms	S

Set the acceleration time of the motor from zero speed to 1000r/min.

Only for speed control mode, position control mode is invalid.

If it is used in speed control mode and forms a position control closed loop with the host computer, this parameter should be set to 0.

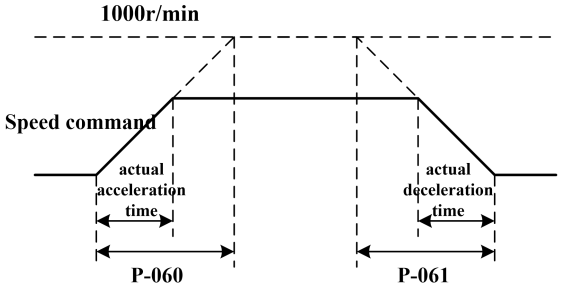

P-061	Speed command deceleration time	Range	Default	Unit	Applicable
		0 ~ 10000	100	ms	S

Set the deceleration time of the motor from 1000r/min to zero speed.

Only for speed control mode, position control mode is invalid.

If it is used in speed control mode and forms a position control closed loop with the host computer, this parameter should be set to 0.

P-063	EMG (emergency stop)/ALM deceleration time	Range	Default	Unit	Applicable
		0 ~ 10000	1000	ms	ALL

When the EMG (emergency stop) mode is deceleration stop (P-164 is set to 1), it works.

When the alarm occurs and the stop mode is deceleration stop (P-136 is set to 1), it will take effect.

Set the deceleration time of the motor from 1000r/min to zero speed when EMG (emergency stop) or alarm occurs, and the deceleration curve is linear.

P-064	Torque limit selection	Range	Default	Unit	Applicable
		0 ~ 2	0		ALL

To set torque limit mode:

P064	Description Forward (CCW) Reverse (CW)	Description Forward (CCW) Reverse (CW)	Description Forward (CCW) Reverse (CW)
0	basic restrictions	Determined by DI input TCCW:	Determined by DI input TCCW:
1	Basic limit + analog limit	In addition to the basic limit, it is also limited by the analog torque command (this limit is not divided into directions).	
2	Basic limit + internal torque limit	In addition to the basic limit, it is also limited by the internal torque command (this limit is not divided into directions). The internal torque command is determined by TRQ1 and TRQ2 input by DI.	

Note: 1. If multiple restrictions occur, the final limit value is the value with the smaller absolute value.

2. The restrictions of P065 and P066 are valid at any time.

3. Even if the set value exceeds the maximum torque allowed by the system, the actual torque will be limited within the maximum torque.

P-065	Internal forward rotation (CCW) torque limit	Range	Default	Unit	Applicable
		0 ~ 300	300	%	ALL

Set the internal torque limit value of the motor CCW direction.

This restriction is valid at all times.

If the set value exceeds the maximum overload capacity allowed by the system, the actual limit is the maximum overload capacity allowed by the system.

P-066	Internal reverse rotation (CW) torque limit	Range	Default	Unit	Applicable
		-300 ~ 0	-300	%	ALL

Set the internal torque limit value in the CW direction of the motor.

This restriction is valid at all times.

If the set value exceeds the maximum overload capacity allowed by the system, the actual limit is the maximum overload capacity allowed by the system.

P-067	External forward rotation (CCW) torque limit	Range	Default	Unit	Applicable
		0 ~ 300	100	%	ALL

Set the external torque limit value of the servo motor CCW direction.

This limit is valid only when TCCW (forward rotation torque limit) of DI input is ON.

When the limit is valid, the actual torque limit is the minimum value among the maximum overload capacity allowed by the system, the internal forward torque limit and the external forward torque limit.

P-068	External reverse rotation (CW) torque limit	Range	Default	Unit	Applicable
		-300 ~ 0	-100	%	ALL

Set the external torque limit value in the CW direction of the servo motor.

This limit is valid only when TCW (reverse torque limit) of DI input is ON.

When the limit is valid, the actual torque limit is the smallest absolute value among the maximum overload capacity allowed by the system, the internal reverse torque limit, and the external reverse torque limit.

P-069	Test run torque limit	Range	Default	Unit	Applicable
		0 ~ 300	100	%	ALL

Set the torque limit value in trial operation mode (speed JOG operation, keyboard speed regulation, demonstration mode).

Regardless of the direction of rotation, both forward and reverse rotations are limited.

The internal and external torque limits are still valid.

P-070	Forward rotation (CCW) torque overload alarm level	Range	Default	Unit	Applicable
		0 ~ 300	140	%	ALL

Set the forward rotation (CCW) torque overload value, which is the percentage of rated torque.

When the forward torque of the motor exceeds P-070 and the duration is longer than P-072, the drive will alarm, the alarm number is Err-29, and the motor will stop.

P-071	Reverse (CW) torque overload alarm level	Range	Default	Unit	Applicable
		-300 ~ 0	-140	%	ALL

Set the reverse (CW) torque overload value, which is the percentage of rated torque.

When the motor reverse torque exceeds P-071 and the duration is longer than P-072, the drive will alarm, the alarm number is Err29, and the motor will stop.

P-072	Torque overload alarm detection time	Range	Default	Unit	Applicable
		1 ~ 30000	1000	ms	ALL

Refer to the description of parameters P-070 and P-071.

P-075	Maximum speed limit	Range	Default	Unit	Applicable
		0 ~ 6000	3500	r/min	ALL

Set the allowable maximum speed limit of the servo motor.

Regardless of the direction of rotation.

If the set value exceeds the maximum speed allowed by the system, the actual speed will also be limited within the maximum speed.

P-076	JOG running speed	Range	Default	Unit	Applicable
		0 ~ 5000	100	r/min	S

Set the running speed of JOG operation.

P-077	Speed limit selection	Range	Default	Unit	Applicable
		0 ~ 2	0		T

Set the speed limit mode in torque control, the speed limit is not divided into directions.

P077	illustrate	explain
0	basic restrictions	Limited by parameter P078.
1	Basic limit + analog limit	In addition to the basic limit, it is also limited by the analog speed command.
2	Basic Limit + Internal Speed Limit	In addition to the basic limit, it is also limited by the internal speed command. The internal speed command is determined by the SP1, SP2, and SP3 of the DI input. Please refer to the DI description.

Note: 1. If multiple limits occur, the final limit value is the smaller absolute value. Even if the set value exceeds the maximum speed allowed by the system, the actual speed will be limited within the maximum speed.

P-078	Speed limit during torque control	Range	Default	Unit	Applicable
		0 ~ 5000	1000	r/min	T

During torque control, the motor running speed is limited within this parameter.

It can prevent the phenomenon of overspeed at light load.

When overspeed occurs, the speed negative feedback is connected to reduce the actual torque, but the actual speed will be slightly higher than the speed limit value.

P-079	Speed limit error during torque control	Range	Default	Unit	Applicable
		1 ~ 5000	100	r/min	T

When overspeed occurs, this parameter can adjust the speed negative feedback amount.

The smaller the parameter value, the larger the negative feedback amount, the steeper the speed limit curve, and the smaller the overspeed amount, but too small may cause jitter.

P-080	Position out-of-tolerance detection range	Range	Default	Unit	Applicable
		0 ~ 32767	400	0.01 圈	P

Set the detection range of position out-of-tolerance alarm.

In the position control mode, when the count value of the position deviation counter exceeds the pulse corresponding to this parameter value, the servo drive will give a position out-of-tolerance alarm (Err 4).

The unit is revolution. Multiply the encoder's resolution per revolution to get the number of pulses. If a 2500-line encoder is used, the resolution per revolution of the encoder is 10,000, and when the parameter value is 400, it corresponds to 40,000 encoder pulses.

P-081	motor encoder type selection	Range	Default	Unit	Applicable
		0～1	0		ALL

Set the type of motor encoder;

Parameter meaning: 0: non-wire-saving photoelectric encoder; 1: wire-saving photoelectric encoder.

P-082	Number of lines of the motor encoder	Range	Default	Unit	Applicable
		1~32767	2500	pulse	ALL

Set the number of lines of the motor encoder, the default setting is 2500 lines of photoelectric encoder;

If it is an incremental encoder, the number of pulses per revolution ppr = the number of lines of the motor encoder * 4.

P-084	The motor encoder control parameter	Range	Default	Unit	Applicable
		0～11111	0		ALL

Set the polarity of the A/B signal of the motor encoder: 0: A/B is not inverted 1: A/B is inverted

P-097	Positive and negative limit use mode / positive and negative control	Range	Default	Unit	Applicable
		0 ~ 33	33		ALL

Forward drive prohibition (CCWL) and reverse drive prohibition (CWL) in DI input are used for limit stroke protection. Normally closed switch is used. When the input is ON, the motor can run in this direction. When it is OFF, it cannot run in this direction. . If the limit stroke protection is not used, it can be ignored through this parameter, so that it can run without connecting the drive prohibition signal.

The default value is to ignore the drive prohibition. If you need to use the drive prohibition function, please modify this value first.

The meaning of the one-digit parameter:

P-097 single digit	Reverse Drive Disable (CWL)	Forward Drive Disable (CCWL)
0	use	use
1	use	neglect
2	neglect	use
3	neglect	neglect

Use: When the input signal is ON, the motor can run in this direction; when it is OFF, the motor cannot run in this direction.

Ignore: The motor can run in this direction, the drive prohibition signal has no effect, so it is not necessary to connect to this signal.

The meaning of the ten-digit parameter: in the speed control mode, it is used with the analog speed command.

P-097 ten digits	Forward signal usage mode	Invert signal usage mode
0	(analog speed command)	(analog speed command)
1	use	use
2	use	Do not use
3	Do not use	use

Use: The size of the speed command is given by the 0~10V analog quantity, and the direction is determined by the forward and reverse input points.

Not used: The magnitude and direction of the speed command are given by -10V~10V analog, and the forward and reverse input points do not work.

P-098	Force enable	Range	Default	Unit	Applicable
		0~1	0		ALL

Parameter meaning:

0: Enable SON control by DI input;

1: Software forced enable.

P-099	Motor series code	Range	Default	Unit	Applicable
		0~15	0		ALL

Set the motor series, the UVW phase sequence of the motor power line of different series may be different, the AB signal polarity of the encoder, and the offset angle of the encoder installation may also be different;

Wrong settings may cause the motor to stall or run! Therefore, users must ensure the correctness of this parameter before using the drive!

Parameter meaning:

For specific setting instructions, see Chapter 7 Motor Adaptation Table.

5.4.2 1st stage parameters

P-100	Digital input DI1 function	Range	Default	Unit	Applicable
		-21～21	1		ALL

Function planning of digital input DI1. The absolute value of the parameter indicates the function, and the symbol indicates the logic. For the function, please refer to chapter 5.5.

Symbol represents input logic, positive number represents positive logic, negative number represents negative logic, ON is valid, OFF is invalid:

parameter value	DI input signal	DI results
A positive number	open circuit	OFF
	turn on	ON

negative number	open circuit	ON
	turn on	OFF

When the function selection of multiple input channels is the same, the function result is a logical OR relationship. For example, both P-100 and P-101 are set to 1 (SON function), then when either DI1 and DI2 are ON, SON is valid.

The input function that is not selected by parameters P-100~P-104, that is, the unplanned function, will be OFF (invalid). But there are exceptions, setting parameters P-120~P-124 can force the input function ON (valid), regardless of whether the function is planned or not.

P-101	Digital input DI2 function	Range	Default	Unit	Applicable
		-21～21	2		ALL

For the function planning of digital input DI2, refer to the description of parameter P-100.

P-102	Digital input DI3 function	Range	Default	Unit	Applicable
		-21～21	3		ALL

For the function planning of digital input DI3, refer to the description of parameter P-100.

P-103	Digital input DI4 function	Range	Default	Unit	Applicable
		-21～21	4		ALL

For the function planning of digital input DI4, refer to the description of parameter P-100.

P-104	Digital input DI5 function	Range	Default	Unit	Applicable
		-21～21	20		ALL

For the function planning of digital input DI5, refer to the description of parameter P-100.

P-105	Digital input DI6 function	Range	Default	Unit	Applicable
		-21～21	21		ALL

For the function planning of digital input DI6, refer to the description of parameter P-100.

P-108	Digital output DO1 function	Range	Default	Unit	Applicable
		-12～12	2		ALL

Digital output DO1 function planning, the absolute value of the parameter indicates

the function, the symbol indicates the logic, please refer to chapter 5.6 for the function.

0 is forced OFF, 1 is forced ON.

Symbols represent output logic, positive numbers represent positive logic, and negative numbers represent negative logic:

parameter value	Corresponding function	DO output signal
A positive number	ON	turn on
	OFF	deadline
negative number	ON	deadline
	OFF	turn on

P-109	Digital output DO2 function	Range	Default	Unit	Applicable
		-12～12	3		ALL

For the functional planning of digital output DO2, refer to the description of parameter P108.

P-110	Digital output DO3 function	Range	Default	Unit	Applicable
		-12～12	5		ALL

For the function planning of digital output DO3, refer to the description of parameter P108.

P-111	Digital output DO4 function	Range	Default	Unit	Applicable
		-12～12	8		ALL

For the function planning of digital output DO4, refer to the description of parameter P108.

P-120	Digital input DI forced valid parameter1	Range	Default	Unit	Applicable
		00000～11111	00000		ALL

The corresponding function is represented by 5 decimal digits:

Digit	Dec5	Dec4	Dec3	Dec2	Dec1
Corresponding function	NoUse	TCW	TCCW	ACLR	SON

The function for forcing DI input is valid. If the corresponding function bit is set to 1, the function is forced ON (valid).

Refer to Section 5.5 for the meaning of the DI symbol.

Parameter meaning:

one of the parameters	Corresponding function [Note]	functional result

0	Not planned	OFF
	planned	determined by the input signal
1	unplanned or planned	ON

Note: Planned refers to the function selected by parameters P-100~P-105.
Unplanned refers to functions that are not selected by parameters P-100~P-105.

P-121	Digital input DI forced valid parameter2	Range	Default	Unit	Applicable
		00000～11111	00000		ALL

The corresponding function is represented by 5 decimal digits:

Digit	Dec5	Dec4	Dec3	Dec2	Dec1
Corresponding function	ZCLAMP	SP3	SP2	SP1	CMODE

Others refer to the description of parameter P120.

P-122	Digital input DI forced valid parameter3	Range	Default	Unit	Applicable
		00000～11111	00000		ALL

The corresponding function is represented by a 5-digit decimal

Digit	Dec5	Dec4	Dec3	Dec2	Dec1
Corresponding function	TRQ2	TRQ1	CINV	CZERO	CCW

Others refer to the description of parameter P120.

P-123	Digital input DI forced valid parameter4	Range	Default	Unit	Applicable
		00000～11111	00000		ALL

The corresponding function is represented by 5 decimal digits:

Digit	Dec5	Dec4	Dec3	Dec2	Dec1
Corresponding function	GEAR2	GEAR1	EMG	PC	CW

Others refer to the description of parameter P120.

P-124	Digital input DI forced valid parameter5	Range	Default	Unit	Applicable
		00000～11111	00000		ALL

The corresponding function is represented by 5 decimal digits:

Digit	Dec5	Dec4	Dec3	Dec2	Dec1
Corresponding function	GAIN	CWL	CCWL	PECLR	INH

Others refer to the description of parameter P120.

P-125	Digital input DIx filtering (DI1~DI6 share this filter parameter)	Range	Default	Unit	Applicable
		1～1000	5	ms	ALL

Digital filter time constant for DI input.

The smaller the parameter value, the faster the signal response speed; the larger the parameter value, the slower the signal response speed, but the stronger the ability to filter noise.

P-136	Enable off or stop mode when an alarm occurs	Range	Default	Unit	Applicable
		0～1	0		P

When the drive is turned off or an alarm occurs, this parameter is used to set the stop mode.

The meaning of the parameter is:

0: The drive cuts off the motor current directly, and the motor stops freely.

1: The drive keeps the first enable state, controls the motor to decelerate and stop at the deceleration time defined by P-063, and then turns off the enable to cut off the motor current.

P-137	Internal speed 1	Range	Default	Unit	Applicable
		-5000～5000	0	r/min	S

Internal speed 1, refer to the description of parameter P-025.

P-138	Internal speed 2	Range	Default	Unit	Applicable
		-5000～5000	0	r/min	S

Internal speed 2, refer to the description of parameter P-025.

P-139	Internal speed 3	Range	Default	Unit	Applicable
		-5000～5000	0	r/min	S

Internal speed 3, refer to the description of parameter P-025.

P-140	Internal speed 4	Range	Default	Unit	Applicable
		-5000～5000	0	r/min	S

Internal speed 4, refer to the description of parameter P-025.

P-141	Internal speed 5	Range	Default	Unit	Applicable
		-5000～5000	0	r/min	S

Internal speed 5, refer to the description of parameter P-025.

P-142	Internal speed 6	Range	Default	Unit	Applicable

P-142	Internal speed 6	Range	Default	Unit	Applicable
		-5000～5000	0	r/min	S

- Internal speed 6, refer to the description of parameter P-025.

P-143	Internal speed 7	Range	Default	Unit	Applicable
		-5000～5000	0	r/min	S

- Internal speed 7, refer to the description of parameter P-025.

P-144	Internal speed 8	Range	Default	Unit	Applicable
		-5000～5000	0	r/min	S

Internal speed 8, refer to the description of parameter P-025.

P-145	Internal torque 1	Range	Default	Unit	Applicable
		-300～300	0	%	T

Internal torque 1, refer to the description of parameter P-026.

P-146	Internal torque 2	Range	Default	Unit	Applicable
		-300～300	0	%	T

For internal torque 2, refer to the description of parameter P-026.

P-147	Internal torque 3	Range	Default	Unit	Applicable
		-300～300	0	%	T

For internal torque 3, refer to the description of parameter P-026.

P-148	Internal torque 4	Range	Default	Unit	Applicable
		-300～300	0	%	T

Internal torque 4, refer to the description of parameter P-026.

P-150	Positioning complete range	Range	Default	Unit	Applicable
		0～32767	10	脉冲	P

Set the pulse range for positioning completion under position control.

When the number of remaining pulses in the position deviation counter is less than or equal to the set value of this parameter, the COIN (positioning complete) of the digital output DO is ON, otherwise it is OFF.

The comparator has hysteresis function, which is set by parameter P-151.

P-152	Positioning proximity range	Range	Default	Unit	Applicable
		0～32767	500	脉冲	P

Set the positioning proximity pulse range under position control.

When the number of remaining pulses in the position deviation counter is less than or equal to the set value of this parameter, the NEAR (near positioning) of the digital output DO is ON, otherwise it is OFF.

The comparator has hysteresis function, which is set by parameter P-153.

When the positioning is about to be completed, the host computer receives the NEAR signal to prepare for the next step. Generally, the parameter value should be greater than P-150.

P-154	Arrival speed	Range	Default	Unit	Applicable
		-5000～5000	500	r/min	ALL

When the motor speed exceeds this parameter, the ASP (speed arrival) of the digital output DO is ON, otherwise it is OFF.

The comparator has hysteresis function, which is set by parameter P-155.

With polarity setting function, controlled by parameter P-156:

P-156	P-154	Comparators
0	>0	speed regardless of direction
1	>0	Only detect forward speed
	<0	Only detect reverse speed

P-156	Arrival velocity polarity	Range	Default	Unit	Applicable
		0～1	0		ALL

Refer to the description of parameter P-154.

P-157	Arrival torque	Range	Default	Unit	Applicable
		-300～300	100	%	ALL

When the motor torque exceeds this parameter, the ATRQ (torque arrival) of the digital output DO is ON, otherwise it is OFF.

The comparator has hysteresis function, which is set by parameter P-158.

It has the function of polarity setting, which is controlled by parameter P-159:

P-159	P-157	Comparators
0	>0	Torque regardless of direction
1	>0	Only detect forward torque
	<0	Only the reverse torque is detected

P-159	Arrival torque polarity	Range	Default	Unit	Applicable
		0～1	0		ALL

- Refer to the description of parameter P-157.

P-160	Zero speed detection point	Range	Default	Unit	Applicable
		0～1000	10	r/min	ALL

- When the motor speed is lower than this parameter, ZSP (zero speed) of digital output DO is ON, otherwise it is OFF.
- The comparator has hysteresis function, which is set by parameter P-161.

P-162	Zero Speed Clamp Mode	Range	Default	Unit	Applicable
		0～1	0		S

- When the following conditions are met, the zero-speed clamping function is enabled:
- Condition 1: Speed Control Mode
- Condition 2: ZCLAMP (zero-speed clamp) in DI is ON
- Condition 3: The speed command is lower than parameter P-160
- When any of the above conditions are not satisfied, execute normal speed control.
- When the zero-speed clamp function is enabled, the meaning of this parameter is:
- 0: The motor position is fixed at the moment the function is turned on. At this time, the internal position control is connected, and even if the rotation occurs due to external force, it will return to the zero fixed point.
- 1: When the function is turned on, the speed command is forced to zero speed. The interior is still speed control and may rotate due to external forces.

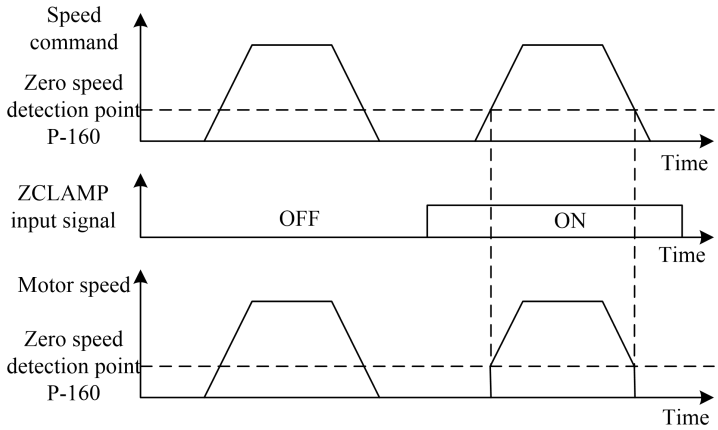

P-164	emergency stop mode	Range	Default	Unit	Applicable
		0～1	0		P

- When the EMG (emergency stop) in the driver DI is ON, this parameter is used to

set the stop mode.

- The meaning of the parameter is:
- 0: The driver cuts off the motor current directly, and the motor stops freely;
- 1: The drive keeps the enabled state, and controls the motor to decelerate and stop at the acceleration and deceleration time defined by P-063.

P-165	Motor standstill speed detection point	Range	Default	Unit	Applicable
		0～1000	5	r/min	ALL

- Motor stationary detection, the motor speed is lower than the parameter value and the motor is considered stationary.
- Only used for electromagnetic brake timing judgment.

P-166	Electromagnetic brake delay time when the motor is stationary	Range	Default	Unit	Applicable
		0～5000	500	ms	ALL

- When the system changes from enabled state to disabled or an alarm occurs, define the delay time from electromagnetic brake braking (DO output terminal BRK OFF) to motor current cut-off during the stationary period of the motor.
- This parameter is to cut off the current after the brake is reliably braked to avoid the slight displacement of the motor or the drop of the workpiece. The parameter should not be less than the delay time of the mechanical brake.
- Please refer to chapter 4.7 for the corresponding timing.

P-167	Electromagnetic brake waiting time when the motor is running	Range	Default	Unit	Applicable
		0～5000	500	ms	ALL

- When the system changes from enabled state to disabled or an alarm occurs, define the delay time from motor current cut off to electromagnetic brake braking (DO output terminal BRK OFF) during motor operation.
- This parameter is to decelerate the motor from high-speed rotation to low-speed, and then brake the brake to avoid damage to the brake;
- The actual action time is the time required for P-167 or the motor to decelerate to the value of P-168, whichever is the smallest.
- Please refer to chapter 4.7 for the corresponding timing.

P-168	Electromagnetic brake action speed when the motor is running	Range	Default	Unit	Applicable
		0～3000	100	r/min	ALL

- Refer to the description of parameter P-167.

P-169	Delay time for electromagnetic brake opening	Range	Default	Unit	Applicable
		0～5000	500	r/min	ALL

- When the system changes from the disabled state to the enabled state, define the delay time from when the motor current is turned on to when the electromagnetic brake is released (DO output terminal BRK ON).

- Please refer to chapter 4.7 for the corresponding timing.

5.5 Detailed explanation of DI function

Special note: DI1~DI6 are programmable input ports, whose functions are configured by parameters P-100~P-105; DO1~DO4 are programmable output ports, whose functions are configured by parameters P-108~P-111; the parameter configuration is detailed in Chapter 5 5.4.2 section, the specific functions are described as follows:

<table>
<tr><th>Serial number</th><th>Symbol</th><th>Features</th><th>Functional explanation</th></tr>
<tr><td>0</td><td>NULL</td><td>No function</td><td>The input state has no effect on the system.</td></tr>
<tr><td>1</td><td>SON</td><td>Servo enable</td><td>OFF: The servo drive is disabled, and the motor does not pass current;
ON : The servo drive is enabled, and the motor is powered.</td></tr>
<tr><td>2</td><td>ARST</td><td>Alarm clear</td><td></td></tr>
<tr><td>3</td><td>CCWL</td><td>Forward drive prohibited</td><td>OFF: Prohibit forward rotation (CCW) rotation;
ON : Enable forward (CCW) rotation.
Used for mechanical limit stroke protection, the function is controlled by parameter P-097. Note that the default value of P-097 is to ignore this function. If you need to use this function, you need to modify P-097.
<table>
<tr><th>P097</th><th>illustrate</th></tr>
<tr><td>0</td><td rowspan="2">To use the forward drive prohibition function, it must be connected to the normally closed contact of the travel switch.</td></tr>
<tr><td>2</td></tr>
<tr><td>1</td><td rowspan="2">If the forward drive prohibition function is ignored, the motor can run in the forward direction. This signal has no effect and does not need to be connected.</td></tr>
<tr><td>3(Default)</td></tr>
</table></td></tr>
</table>

<table>
<tr><th>Serial number</th><th>Symbol</th><th>Features</th><th>Functional explanation</th></tr>
<tr><td>4</td><td>CWL</td><td>Reverse drive prohibited</td><td>OFF: Prohibit reverse rotation (CW);
ON : Reverse (CW) rotation is allowed.
Used for mechanical limit stroke protection, the function is controlled by parameter P-097. Note that the default value of P-097 is to ignore this function. If you need to use this function, you need to modify P-097.
<table>
<tr><td>P-097</td><td>OFF: Prohibit reverse rotation (CW);</td></tr>
<tr><td>0</td><td rowspan="2">ON : Reverse (CW) rotation is allowed.</td></tr>
<tr><td>1</td></tr>
<tr><td>2</td><td rowspan="2">OFF: Prohibit reverse rotation (CW);</td></tr>
<tr><td>3(Default)</td></tr>
</table></td></tr>
<tr><td>5</td><td>TCCW</td><td>Forward torque limit</td><td>OFF: CCW direction torque is not limited by parameter P-067;
ON: CCW direction torque is limited by parameter P-067.
Note that no matter whether TCCW is valid or invalid, CCW direction torque is also limited by parameter P-065.</td></tr>
<tr><td>6</td><td>TCW</td><td>Reverse torque limit</td><td>OFF: CW direction torque is not limited by parameter P-068;
ON : CW direction torque is limited by parameter P-068.
Note that no matter whether TCW is valid or invalid, the CW direction torque is also limited by parameter P-066.</td></tr>
<tr><td>7</td><td>ZCLAMP</td><td>Zero speed clamp</td><td>The zero-speed clamp function is enabled when the following conditions are met:
Condition 1: Speed control mode;
Condition 2: ZCLAMP ON;
Condition 3: The speed command is lower than parameter P-160.
When any of the above conditions are not satisfied, normal speed control is performed. Refer to the description of parameter P-162 for specific application.</td></tr>
<tr><td>8</td><td>CZERO</td><td>zero command</td><td>Under speed or torque control, the speed or torque commands are:
OFF: normal command;
ON : Zero command.</td></tr>
<tr><td>9</td><td>CINV</td><td>instruction negation</td><td>Under speed or torque control, the speed or torque commands are:
OFF: normal command;
ON : Invert the instruction.</td></tr>
<tr><td>10</td><td>SP1</td><td>Internal speed selection 1</td><td rowspan="2">In speed control and speed limit, the combination of SP1, SP2 and SP3 selects the internal speed 1~8:
<table>
<tr><th colspan="3">DI signal [Note]</th><th rowspan="2">Speed command</th></tr>
<tr><th>SP3</th><th>SP2</th><th>SP1</th></tr>
<tr><td>0</td><td>0</td><td>0</td><td>Internal speed 1 (parameter P-137)</td></tr>
<tr><td>0</td><td>0</td><td>1</td><td>Internal speed 2 (parameter P-138)</td></tr>
<tr><td>0</td><td>1</td><td>0</td><td>Internal speed 3 (parameter P139)</td></tr>
<tr><td>0</td><td>1</td><td>1</td><td>Internal speed 4 (parameter P-140)</td></tr>
</table></td></tr>
<tr><td>11</td><td>SP2</td><td>Internal speed selection 2</td></tr>
</table>

<table>
<tr><th>Serial number</th><th>Symbol</th><th>Features</th><th>Functional explanation</th></tr>
<tr><td>12</td><td>SP3</td><td>Internal speed selection 3</td><td>
<table>
<tr><td>1</td><td>0</td><td>0</td><td>Internal speed 5 (parameter P-141)</td></tr>
<tr><td>1</td><td>0</td><td>1</td><td>Internal speed 6 (parameter P-142)</td></tr>
<tr><td>1</td><td>1</td><td>0</td><td>Internal speed 7 (parameter P-143)</td></tr>
<tr><td>1</td><td>1</td><td>1</td><td>Internal speed 8 (parameter P-144)</td></tr>
</table>
Note: 0 means OFF, 1 means ON.
</td></tr>
<tr><td>13</td><td>TRQ1</td><td>Internal torque selection 1</td><td rowspan="2">In the case of torque control and torque limit, the combination of TRQ1 and TRQ2 selects internal torque 1~4:
<table>
<tr><th colspan="2">DI signal [Note]</th><th rowspan="2">Torque command</th></tr>
<tr><th>TRQ2</th><th>TRQ1</th></tr>
<tr><td>0</td><td>0</td><td>Internal torque 1 (parameter P-145)</td></tr>
<tr><td>0</td><td>1</td><td>Internal torque 2 (parameter P-146)</td></tr>
<tr><td>1</td><td>0</td><td>Internal torque 3 (parameter P-147)</td></tr>
<tr><td>1</td><td>1</td><td>Internal torque 4 (parameter P-148)</td></tr>
</table>
Note: 0 means OFF, 1 means ON.</td></tr>
<tr><td>14</td><td>TRQ2</td><td>Internal torque selection 2</td></tr>
<tr><td>15</td><td>EMG</td><td>emergency shutdown</td><td>OFF: Allow the servo drive to work;
ON : stop the motor according to the method set by parameter P-164.</td></tr>
<tr><td>16</td><td>CMODE</td><td>control mode switch</td><td>When parameter P-004 is set to 3, 4, and 5, the control mode can be switched:
<table>
<tr><th>P-004</th><th>CMODE</th><th>Control Mode</th></tr>
<tr><td rowspan="2">3</td><td>0</td><td>Position Mode</td></tr>
<tr><td>1</td><td>Speed Mode</td></tr>
<tr><td rowspan="2">4</td><td>0</td><td>Position Mode</td></tr>
<tr><td>1</td><td>Torque Mode</td></tr>
<tr><td rowspan="2">5</td><td>0</td><td>Speed Mode</td></tr>
<tr><td>1</td><td>Torque Mode</td></tr>
</table>
注：0 表示 OFF，1 表示 ON。</td></tr>
<tr><td></td><td></td><td></td><td></td></tr>
<tr><td>18</td><td>GEAR1</td><td>Electronic gear selection 1</td><td rowspan="2">Parameter P-034 is used to configure the dynamic electronic gear application mode, please refer to the specific description in chapter 4.2.3.</td></tr>
<tr><td>19</td><td>GEAR2</td><td>Electronic gear selection 2</td></tr>
<tr><td>20</td><td>CLE</td><td>Position deviation clear</td><td>Clear the position deviation counter, the clearing mode is selected by parameter P-163, the position deviation clearing occurs in:
P-163=0: CLE ON level;
P-163=1: CLE rising edge (the moment when OFF changes to ON).</td></tr>
</table>

Serial number	Symbol	Features	Functional explanation
21	INH	Pulse input prohibited	OFF: The position command pulse is allowed to pass; ON : Position command pulses are disabled.

5.6 Detailed explanation of DO function

Serial number	Symbol	Features	Functional explanation
0	OFF	always invalid	Force output OFF.
1	ON	always valid	Force output ON.
2	SRDY	Servo ready	OFF: Servo main power is not connected or there is an alarm; ON : Servo main power is normal, no alarm.
3	ALM	Servo Alarm	OFF: Servo Alarm not Happen ON: Servo Alarm Happen
4	ZSP	zero speed	OFF: Motor speed is higher than parameter P-160 (regardless of direction); ON : Motor speed is lower than parameter P-160 (regardless of direction).
5	COIN	Target Position Arrive	During position control mode: OFF: The position deviation is greater than parameter P-150; ON : The position deviation is smaller than parameter P-150.
6	ASP	Target Speed Arrive	OFF: Motor speed is lower than parameter P-154 (regardless of direction); ON : Motor speed is higher than parameter P-154 (regardless of direction).
7	ATRQ	Target Torque Arrive	OFF: Motor Torque is lower than parameter P-157 ON : Motor Torque is higher than parameter P-157
8	BRK	Electromagnetic brake	OFF: Electromagnetic brake hold on ON : Electromagnetic brake release
9	RUN	Servo running	OFF: Servo not Running ON : Servo Running
10	NEAR	positioning approach	During position control mode: OFF: The position deviation is greater than parameter P-152; ON : The position deviation is smaller than parameter P-152.
11	TRQL	torque limit	OFF: Motor torque not arrive the torque limit ON : Motor torque arrive the torque limit
12	SPL	speed limit	OFF: Motor speed not arrive the speed limit ON : Motor speed arrive the speed limit

Chapter 6 Troubleshooting and Diagnosis

6.1 List of alarms

Alarm code	Alarm name	Alarm content	Alarm clear
Err--	no alarm	works fine	
Err 1	overspeed	Motor speed exceeds maximum limit	Yes
Err 2	Power main circuit overvoltage	The main circuit power supply voltage exceeds the specified value, check whether the braking resistor is damaged or the resistance value is appropriate	No
Err 3	Power main circuit undervoltage	The main circuit power supply voltage is lower than the specified value	No
Err 4	Position tracking deviation error	The position tracking deviation exceeds the set value (P-080).	Yes
Err 5	position command frequency error	The position command frequency exceeds the maximum allowable frequency	Yes
Err 6	Motor stall	The motor power line is connected incorrectly, and the number of pole pairs P-201 is incorrect	Yes
Err 7	Drive forbidden exception	CCWL, CWL driver stroke limit switch signal abnormal	Yes
Err 9	Incremental encoder ABZ signal failure	The encoder ABZ signal is disturbed or disconnected	Yes
Err10	Incremental encoder UVW signal failure	There is interference or disconnection in the UVW signal of the encoder	Yes
Err11	IPM module failure	The power main circuit IPM inverter module is faulty	No
Err12	Overcurrent	The instantaneous current of the servo drive is too large	Yes
Err13	overload	The average load current of the motor is too high	Yes
Err14	Braking peak power overload	If the instantaneous load is too large for a short time during braking, check whether the braking resistor is damaged or whether the resistance value is appropriate.	Yes
Err20	EEPROM error	EEPROM read and write errors or unexpected power failure when saving parameters	No
Err21	logic circuit error	Processor peripheral logic circuit failure	No
Err23	AD conversion reference voltage error	AD sampling circuit voltage reference is not a standard value	No

Err24	A/D conversion channel asymmetry or zero drift	AD Sampling Amplification Conditioning Circuit Abnormal	No
Err29	User torque overload alarm	The motor load exceeds the value and duration set by the user	Yes
Err30	Encoder Z signal lost	Encoder Z signal does not appear	No
Err31	The encoder Z signal is detected abnormally	The encoder Z signal is disturbed or the signal is unstable	No
Err32	The encoder UVW signal is illegally encoded	Encoder UVW signal disconnection	No
Err33	Wire-saving encoder signal error	No high-impedance state during power-up sequence	No
Err36	Second encoder disconnection	The second encoder is disconnected or there is interference	No

6.2 Alarm reason and treatment

Err 1(overspeed)

Reason	Check	Solution
Motor wiring U, V, W phase sequence error	Check U, V, W wiring	Check U, V, W wiring
Motor speed overshoot	Check the running status and view the parameters	Check the running status and view the parameters
Encoder wiring error	Check encoder wiring	Check encoder wiring

Err 2(main circuit overvoltage)

Reason	Check	Solution
Input AC power is too high	Check the supply voltage	Make the voltage meet the product specification
Regenerative braking failure	Whether the regenerative braking resistor, brake pipe is invalid or the wiring is disconnected	Repair
Excessive regenerative braking energy	Check the brake load ratio	Reduce start-stop frequency Increase the acceleration and deceleration time Decrease torque limit value Reduce load inertia Replacement of higher power drives and motors Replace with larger braking resistor

Err 3(main circuit undervoltage)

Reason	Check	Solution
Input AC power is too low	Check the supply voltage	Make the voltage meet the product specification

Err 4(Position out of tolerance)

Reason	Check	Solution
Motor wiring U, V, W phase sequence error	Check U, V, W wiring	Correctly connect the U, V, W wiring of the motor, and correspond to the U, V, W labels of the driver plug one by one
Encoder zero change	Check encoder zero	Reinstall the encoder and zero
Encoder wiring error	Check encoder wiring	Correct wiring
Motor stuck	Check the motor and mechanical connection parts	repair
Command pulse frequency is too high	Check the input frequency, pulse division and multiplication parameters	reduce the input frequency
Position loop gain is too small	Check parameters P-009, P-013	Adjust the pulse division and multiplication parameters
Out of tolerance detection range is too small	Check parameter P-080	Increase position loop gain
Insufficient torque	View torque	Increase torque limit value Increase the position command smoothing filter time reduce load Replacement of higher power drives and motors

Err 5(Position command overclocking)

Reason	Check	Solution
Command pulse frequency is too high	Check whether the input frequency and electronic gear ratio are set correctly	reduce the input frequency Correctly set P029 and P030
The interval time between the motor enable and the command pulse is too short	Add a delay of at least 500ms between the host computer giving the enable and sending the pulse (waiting for the motor to be fully excited)	Modify the timing of the host computer

The command of the host computer does not perform acceleration and deceleration processing or the acceleration and deceleration time is too short	Whether the acceleration and deceleration time setting of the position command sent by the host computer is reasonable	Increase the acceleration and deceleration time of the command sent by the host computer Properly increase the position command smoothing filter coefficient P040

Err 6(motor stall)

Reason	Check	Solution
Motor stuck	Check the motor and mechanical connection parts	Overhaul
Motor wiring U, V, W phase sequence error	Check U, V, W wiring	Correctly connect the U, V, W wiring of the motor, and correspond to the U, V, W labels of the driver plug one by one
Encoder wiring error	Check encoder wiring	Correct wiring
The motor is overloaded	Check whether the load current D-i is too large	reduce load Increase torque limit P065, P065 Replace with a higher power drive

Err 7(Drive forbidden exception)

Reason	Check	Solution
When the servo is enabled, the CCWL and CWL drive prohibition inputs are invalid.	Check CCWL, CWL wiring	Correctly input CCWL and CWL signals If CCWL and CWL signals are not used, parameter P097 can be set to shield

Err 9(Encoder AB signal failure)

Reason	Check	Solution
Encoder wiring error	Check encoder wiring	Correct wiring
Defective encoder cable and connector	Check cables and connectors	Replacing cables and connectors
Motor model is not set correctly	Check motor model	Reset the motor model
Encoder damaged	Check the encoder	Replace the encoder

Err11(power module failure)

Reason	Check	Solution
Short circuit between	Check U, V, W wiring	Correctly connect U, V, W wiring

motor wiring U, V, W		
Damaged motor winding insulation	Check the motor	Replace the motor
drive corruption	Check the drive	There is no problem with the motor, if the power is turned on again, it still alarms, the driver may be damaged, and the driver should be replaced.
Poor grounding	Check the ground wire	properly grounded
disturbed	Check for sources of interference	Add a line filter to keep away from interference sources

Err12(Overcurrent)

Reason	Check	Solution
Short circuit between motor wiring U, V, W	Check U, V, W wiring	Correctly connect U, V, W wiring
Damaged motor winding insulation	Check the motor	Replace the motor
drive corruption	Check the drive	There is no problem with the motor, if the power is turned on again, it still alarms, the driver may be damaged, and the driver should be replaced.

Err13(overload)

Reason	Check	Solution
Continuous operation over rated load	View load rate	Reduce the load or change to a higher power driver
System is unstable	Check motor operation for oscillation	lower system gain
Acceleration and deceleration too fast	Check whether the motor runs smoothly	Increase the acceleration and deceleration time
Encoder zero change	Check encoder zero	Reinstall the encoder and zero

Err14(Braking peak power overload)

Reason	Check	Solution
Input AC power is too high	Check the supply voltage	Make the voltage meet the product specification
Regenerative braking failure	Whether the regenerative braking resistor, brake pipe is invalid or the wiring is	Repair

	disconnected	
Excessive regenerative braking energy	Check the brake load ratio	Reduce start-stop frequency Increase the acceleration and deceleration time Replacement of higher power drives and motors Replace with larger braking resistor
encoder problem	Incorrect number of lines and poles Encoder Z signal error Encoder damaged	Replace the encoder

Err20(EEPROM error)

Reason	Check	Solution
EEPROM chip damaged	Re-power on and check	The fault does not disappear, please replace the drive

Err21(logic circuit error)

Reason	Check	Solution
control circuit failure	Re-power on and check	The fault does not disappear, please replace the drive

Err23(AD conversion reference voltage error)

Reason	Check	Solution
Current sensor and connector problems	Check the main circuit and see if the flexible connecting wire is loose	Replace the drive
AD converter and analog amplifier circuit problems	Check the control circuit	Replace the drive

Err24(The AD conversion channel is asymmetrical or the zero drift value is too large)

Reason	Check	Solution
AD converter and analog amplifier circuit problems	Check the control circuit	Replace the drive

Err29(User torque overload alarm)

Reason	Check	Solution

Unexpected heavy load occurs	Check the load	adjust the load
The setting of parameters P-070, P-071 and P-072 is unreasonable	Check parameters	Adjustment parameters

Err30(Encoder Z signal lost)

Reason	Check	Solution
encoder problem	View encoder Z signal	Replace the encoder
Encoder cable and connector problems	Check cables and connectors	Replacing cables and connectors
Drive interface circuit failure	Check the control circuit	Replace the drive

Err31(The encoder Z signal is detected abnormally)

Reason	Check	Solution
encoder problem	View encoder Z signal	Replace the encoder
Interference in the encoder cable	Check cables and connectors	Replacing cables and connectors
Drive interface circuit failure	Check the control circuit	Replace the drive

Err32(The encoder UVW signal is illegally encoded)

Reason	Check	Solution
encoder problem	Check encoder UVW signal	Replace the encoder
Encoder wiring error, disconnection	Check encoder wiring	Correct wiring, including shielding

Err33(Wire-saving encoder signal error)

Reason	Check	Solution
encoder problem	Check the encoder signal	Replace the encoder
Motor model is not set correctly	Check the motor model and confirm whether the motor is equipped with a wire-saving encoder	Reset the motor model

Chapter 7 Specifications and Adapter Motors

7.1 Drive Specifications

(1) Model naming rules

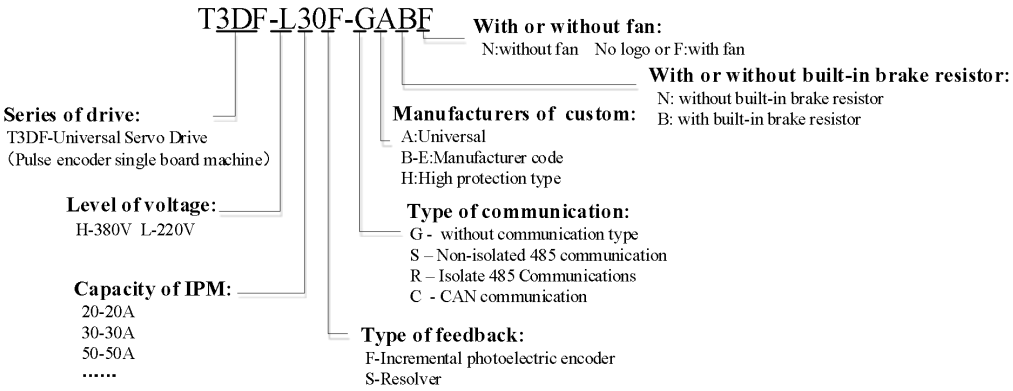

(2) Driver installation dimension drawing

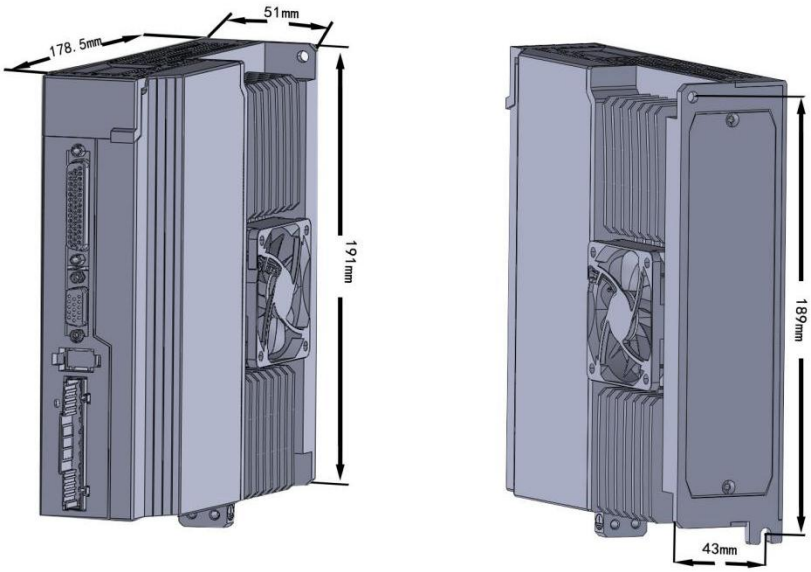

(3) Model specification and function introduction

Table 7.1 Driver Model Specifications and Functions

Model		T3DF-L20	T3DF-L30					
Power Supply	Main power	Single phase/Three phase 220VAC -15%+10% 50/60Hz						
Environment	Temperature	Work：0℃ ~ 40℃ Storage：-40℃ ~ 50℃						
	Humidity	Work：40% ~ 80%(no condensation) Storage：93% or less (no condensation)						
	Atmospheric pressure	86kPa ~ 106 kPa						
Protection class		IP20						
control mode		position, speed, torque, position/speed, speed/torque, position/torque						
digital input		4 programmable input terminals (optical isolation)						
digital output		4 programmable output terminals (optical isolation)						
Encoder Signal output	signal type	A, B, Z differential output, Z signal open collector output						
Position	Input frequency	Differential input: ≤500kHz (kpps); Single-ended input: ≤200kHz (kpps)						
	Command mode	Pulse + Direction; Forward/Reverse Pulse; Quadrature Pulse						
	Electronic gear ratio	1 ~ 32767/1 ~ 32767						
Speed	Simulation command enter	±10VDC, input impedance 10kΩ						
	Instruction plus slow down	Parameter setting P-060/P-061						
	Command source	Analog, internal speed command						
Torque	Monitoring function	-10V ~ +10V, input impedance 10kΩ						
	Torque limit	Parameter setting P-065/P-066						
	Command source	Analog, internal torque command						
Monitoring function		Speed, current position, position deviation, motor torque, motor current, command pulse frequency, etc.						
Protective function		Overspeed, overvoltage, overcurrent, overload, abnormal braking, abnormal encoder, position out of tolerance, command overclocking, etc.						
Feature	Speed Bandwidth	≥800Hz						
	speed volatility	< ±0.03% (load 0 ~ 100%); < ±0.02% (power -15% ~ +10%)						

7.2 Standard 4 pole pairs motor table

Table 7.2 T3DF driver compatible motor model
(Motor series code P-099: F1-MG)

Motor Code (P-002)	Adapter drive Model Specifications (AC 220V)	Servo motor model (220V)	Rated Power (kW)	Rated Current (A)	Rated Torque (Nm)	overload multiple
20	T3DF-L20	40ST-M00130	0.05	0.61	0.16	3
20		40ST-M00330	0.1	0.9	0.32	3
21		60ST-M00630	0.2	1.2	0.6	3
22		60ST-M01330	0.4	2.8	1.3	3
23		60ST-M01930	0.6	3.5	1.9	3
27		80ST-M01330	0.4	2.0	1.3	3
28		80ST-M02430	0.75	3.0	2.4	2.5
29		80ST-M03520	0.73	3.0	3.5	2.5
30		80ST-M04025	1.0	4.4	4	2.5
31		90ST-M02430	0.75	3	2.4	3
32		90ST-M03520	0.73	3	3.5	3
33		90ST-M04025	1.0	4	4	2.5
34	T3DF-L20/L30	110ST-M02030	0.6	2.5	2	2.5/3
35	T3DF-L20/L30	110ST-M04030	1.2	5	4	2/3
39	T3DF-L20/L30	110ST-M04020	0.8	3.5	4	3/3
36	T3DF-L30	110ST-M05030	1.5	6	5	2.5
42	T3DF-L30	110ST-M05050	2.5	8.5	5	1.8
37	T3DF-L30	110ST-M06020	1.2	4.5	6	3
38	T3DF-L30	110ST-M06030	1.8	6	6	2.5
53	T3DF-L30	110ST-M06040	2.4	8	6	1.9
44	T3DF-L20/L30	130ST-M04025	1	4	4	2.5/3
45	T3DF-L20/L30	130ST-M05025	1.3	5	5	2/3
46	T3DF-L30	130ST-M06025	1.5	6	6	2.5
41	T3DF-L30	130ST-M06030	1.8	7	6	2.2
47	T3DF-L30	130ST-M07720	1.6	6	7.7	2.5
47	T3DF-L30	130ST-M07725	2.0	7.5	7.7	2
48	T3DF-L30	130ST-M07730	2.4	9	7.7	1.6/2
40	T3DF-L20/L30	130ST-M10010	1.0	4.5	10	2.2/3
49	T3DF-L30	130ST-M10015	1.5	6	10	2.5
43	T3DF-L30	130ST-M10020	2	8.5	10	1.7
50	T3DF-L30	130ST-M10025	2.6	10	10	1.5
51	T3DF-L30	130ST-M15025	3.8	13.5	15	1.3
52	T3DF-L30	130ST-M15015	2.3	9.5	15	1.6

7.3 Customized 5 pole pairs A series motor adaptation table

Table 7.3 Matching list of 5 pole pairs motor with T3DF driver (Motor series code P-099: F5-nA)

Motor Code （P-002）	Adapter drive Model Specifications (AC 220V)	Servo motor model (220V)	Rated Power （kW）	Rated Current （A）	Rated Torque （Nm）	overload multiple
1	**L15**	**60AST-M00630LB**	0.2	1.1	0.64	3
2	**L15**	**60AST-M01330LB /60AST-M01930LB**	0.4	2.5	1.27	3
3	**L15**	**80AST-M01330LB**	0.4	2.3	1.27	3
4	**L20**	**80AST-M02430LB /80AST-M03230LB**	0.75	4.8	2.39	2.5
5	**L20//L30**	**80AST-M03220LB /80AST-M04025LB**	0.67	5.6	3.2	2/3
6	**L20/L30**	**110AST-M04220LB**	0.88	4.5	4.2	2.2/3
7	**L20/L30**	**110AST-M05420LB**	1.1	5.5	5.4	2/2.7
8	**L30**	**110AST-M06420LB**	1.3	6.5	6.4	2.5
9	**L30**	**110AST-M07520LB**	1.6	8.0	7.5	2/2.5
10	**L30**	**110AST-M04230LB**	1.3	6.5	4.2	2.5
11	**L30**	**110AST-M05430LB**	1.7	8.2	5.4	2/2.5
12	**L30**	**110AST-M06425LB**	1.7	9.5	6.4	1.7/2
13	**L30**	**130AST-M05415LB**	0.85	6.5	5.4	2.5
14	**L30**	**130AST-M06415LB**	1.0	8.0	6.4	2/2.5
15	**L30**	**130AST-M07515LB**	1.2	9.0	7.5	1.7/2
16	**L30**	**130AST-M08415LB**	1.3	9.5	8.4	1.7/2
17	**L30**	**130AST-M09615LB**	1.5	10.0	9.6	1.5/2
18	**L50**	**130AST-M11515LB**	1.8	14.0	11.5	2
19	**L50**	**130AST-M14615LB**	2.3	16.0	14.6	2
20	**L30/L40**	**130AST-M05430LB**	1.7	9.5	5.4	1.7/2
21	**L40/L50**	**130AST-M06430LB**	2.0	11.5	6.4	1.7/2.5
22	**L40/L50**	**130AST-M07530LB**	2.4	12.0	7.5	1.5/2.5
23	**L50**	**130AST-M08430LB**	2.6	13.5	8.4	2.2
24	**L50**	**130AST-M09625LB**	2.5	16	9.6	1.9
32	**L20/L30**	**130AST-M04820LB**				

Note: The above motor is a 5-pole motor, the standard 2500 line photoelectric encoder, you must first set P-000 to 385 or 316, and then select the motor series parameter P-099 to F5-nA, and then set the motor code parameter P-002 according to the motor model, perform restore the motor default parameter operation E-DEF, in order to ensure better control performance. Be sure to follow the above steps to correctly set motor series parameter P-099 and model code parameter P-002.

7.4 Customized 5 pole pairs B series motor adaptation table

Table 7.4 T3DF driver suitable for 5 pole pairs motor model
(Motor series code P-099: F6MG5)

Motor Code (P-002)	Adapter drive Model Specifications (AC 220V)	Servo motor model (220V)	Rated Power (kW)	Rated Current (A)	Rated Torque (Nm)	overload multiple
1	L15	MB060-P64FFNI2	0.2	1.55	0.637	3
2	L15	MB060-013FFNI2	0.4	2.6	1.27	3
3	L15	MB080-013FFNI2	0.4	2.7	1.27	3
4	L20	MB080-024FFNI2	0.75	5.0	2.39	2
5	L20	MB080-033FFNI2	1.0	5.4	3.3	3
6	L20/L30	MB080-040FFNI2	1.2	6.7	4.0	1.8/2.5
7	L20/L30	MB100-032FFNI2	1.0	5.0	3.2	2/3
8	L30/L40	MB100-064FFNI2	2.0	9.9	6.4	1.5/2
9	L20	MB110-020DFNI2	0.4	2.5	2	3
10	L20/L30	MB110-040DFNI2	0.8	5	4	2/3
11	L20/L30	MB110-050DFNI2	1.0	6	5	1.7/2.5
12	L30	MB110-060DFNI2	1.2	7	6	2.2
13	L20	MB110-042DFNI2	0.88	4.6	4.2	2.2
14	L20/L30	MB110-054DFNI2	1.1	5.9	5.4	2/2.5
15	L30	MB110-064DFNI2	1.3	7.0	6.4	2.2
16	L30	MB110-075DFNI2	1.6	8.6	7.5	1.8
17	L30	MB130-054CFNI2	0.85	6.9	5.39	2.3
18	L30/L40	MB130-083CFNI2	1.3	10.7	8.34	1.5/2
19	L40/L50	MB130-115CFNI2	1.8	15	11.5	1.5/2
20	L40/L50	MB130-146CFNI2	2.3	12.5	14.6	1.7/2.5
21	L40/L50	MB130-178CFNI2	2.8	15.5	17.8	1.5/2

Note: The above motor is a 5-pole motor, the standard 2500 line photoelectric encoder, you must first set P-000 to 385 or 316, and then select the motor series parameter P-099 to F6MG5, and then set the motor code parameter P-002 according to the motor model, perform restore the motor default parameter operation E-DEF, in order to ensure better control performance. Be sure to follow the above steps to correctly set motor series parameter P-099 and model code parameter P-002.

Chapter 8 Quick Commissioning Guide

8.1 Notes on quick commissioning

1. Make sure the wiring is correct

● The power terminals L1/L2 and the motor power terminals U/V/W should not be reversely connected and should not be loose;

● The input voltage of L series must be three-phase or single-phase 220V;

● Check whether the +5V power supply in the CN2A terminal is correct, and the polarity cannot be reversed;

● Whether the motor connection cable is short-circuited, it must be grounded reliably;

● Check the command cable and motor encoder cable, they must be connected reliably;

● The wiring of the same motor must correspond to the same driver.

2. Determine the power-on sequence

● The strong power and control power of the T3DF series servo driver adopts an integrated design. When the power is turned on, the strong power and the control power are turned on at the same time. When the power is turned off, the internal strong power is cut off first. Please wait patiently;

● If it is equipped with a servo motor with electromagnetic brake (holding brake), its brake is not controlled by the servo driver, please ensure that the brake is energized (holding brake release) more than 0.5 seconds after the servo is enabled, so as to ensure the safety and position of the equipment precision;

● In order to use the servo drive smoothly, please read the following timing diagram carefully (please refer to Section 4.7 of this manual for more detailed timing diagram):

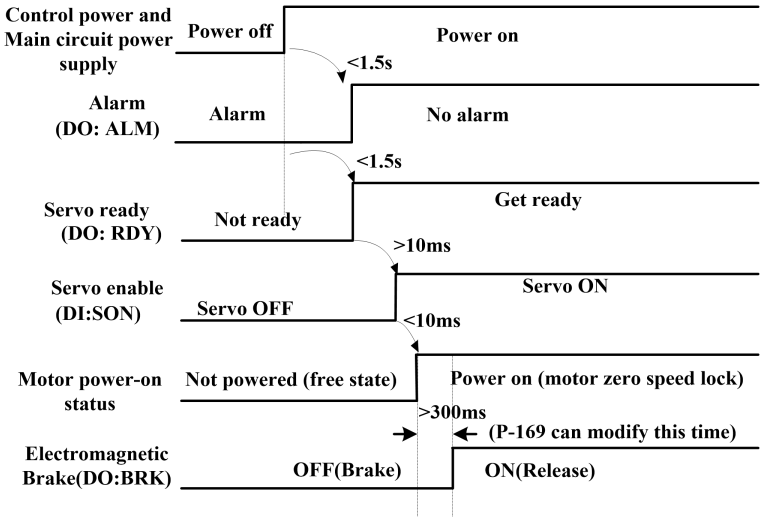

8.2 Position control mode (quick commissioning)

Example: T3DF servo driver, suitable for 130ST-M15015 servo motor (position control)

1: After the power is turned on (POW), the three-phase 220V voltage between the power terminals L1 and L2 is measured to ensure that the power supply is normal;

2: Do not turn on the servo enable signal for the time being, check whether there is an alarm, if there is no alarm, it is working normally, and you can proceed to the next step;

3: Start to adapt the motor control parameters:

a) Enter the parameter modification mode "P-", modify the operation password (parameter P-000) to 385, and then modify the motor series (parameter P-099) and motor code (parameter P-002) to the required motor model, the motor for the model code, see the motor adaptation table in chapter 7.2. In this example, P-002 is set to 5;

b) Enter the parameter management mode "E-", and perform the operation of restoring the default value as shown in the figure below;

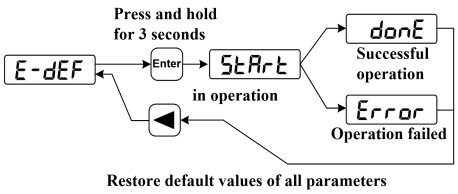

c) After the operation of restoring the default value is successful, set or check several key parameters of position control (as shown in Table 8.1 below). After confirming that it is correct, the host computer can give the external enable signal SON (or internal enable: P-098 is set to 1), after the (RUN) green light is on, a pulse signal is

given to observe the operation effect of the motor, and the gain adjustment operation characteristics can be modified appropriately.

Table 8.1 Key parameter settings for position control mode

Parameter	Name	Settings	Parameter Description
P-004	Control Mode	0 (default)	Set to position control mode
P-029	Electronic gear molecule	1 (default)	Eectronic gear molecule
P-030	Electronic gear denominator	1 (default)	Electronic gear denominator
P-035	Pulse input mode	0 (default)	0: Pulse + direction 1: Forward/reverse pulse 2: Quadrature Pulse (A/B)
P-036	Pulse input direction	0 (default)	0: normal direction 1: Invert the direction
P-005	Speed loop proportional gain	50 (default)	To improve rigidity or reduce tracking error, P-005/P-009 can be adjusted appropriately, each adjustment is 5.
P-006	Speed loop integral time constant	20 (default)	
P-009	Position loop proportional gain	40 (default)	
P-007	Torque filter time constant	45 (default)	When the motor operation produces vibration or noise, the P-019 can be adjusted appropriately, and the adjustment amount is 5 per time
P-019	Speed detection filter time constant	65 (default)	

8.3 Speed control mode (quick commissioning)

Example: T3DF-L30 servo driver, suitable for 130ST-M10015 servo motor (speed control)

1: After the power is turned on (POW), the two-phase 220V voltage between the power terminals L1 and L2 is measured to ensure that the power supply is normal;

2: Make sure the speed analog differential input or single-ended input wiring is correct;

3: Do not turn on the servo enable signal for the time being, check whether there is an alarm, if there is no alarm, the work is normal, and you can proceed to the next step;

4: Start to adapt the motor control parameters:

a) Enter the parameter modification mode "P-", modify the operation password (parameter P-000) to 385, and then modify the motor series (parameter P-099) and motor code (parameter P-002) to the required motor model, the motor For the model code, see the motor adaptation table in chapter 7.2. In this example, P-002 is set to 49;

b) Enter the parameter management mode "E-", and perform the operation of restoring the default value as shown in the figure below;

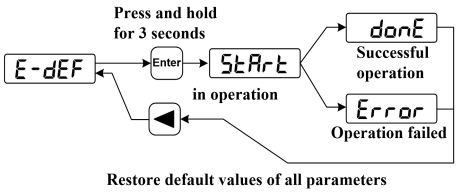

c) After the operation of restoring the default value is successful, set several key parameters of the speed control (as shown in Table 8.2), then switch the menu to "E-SEt" and press the Enter key for 3 seconds to execute the parameter saving operation, and the saving is successful. After power off and restart, after confirming that there is no error, the host computer can give the external enable signal SON (or internal enable: P-098 is set to 1), after the (RUN) green light is on, the analog automatic zero adjustment operation can be performed (details See chapter 3.6.2), give the analog command, observe the motor operation effect, and modify the gain adjustment operation characteristics appropriately.

Table 8.2 Key parameter settings for speed control mode

Parameter	Name	Settings	Parameter Description
P-004	Control Mode	1	Set to speed control mode
P-025	Source of speed command	0 (default)	0: Analog speed 1: Internal multi-speed 8 optional P137~P144 settings
P-046	Analog speed command gain	300 (default) Set as needed	Rotation speed corresponding to 1V analog voltage (unit: r/min/V)
P-047	Analog speed command zero offset compensation	0 (default) Set as needed	Unit: 0.1mv
P-048	Analog speed command direction	0 (default) Set as needed	0: normal direction 1: Invert the direction
P-060	Speed command acceleration time	100 (default) Set as needed	0 to 1000r/min acceleration time (unit: ms)
P-061	Speed command deceleration time	100 (default) Set as needed	1000 r/min to 0 deceleration time (unit: ms)
P-005	Speed loop proportional gain	50 (default)	To improve rigidity, P-005 can be adjusted appropriately, each adjustment is 5
P-006	Speed loop integral time constant	20 (default)	P-006 can be adjusted bigger if load inertial is bigger, each adjustment is 10.
P-007	Torque filter time constant	45 (default)	P-019 can be adjusted bigger if motor has noise, each adjustment is 10.
P-019	Speed detection filter time constant	65 (default)	

8.4 Torque control mode (quick commissioning)

Example: T3DF-L20 servo driver, suitable for 110ST-M06020 servo motor

(torque control)

1: After the power is turned on (POW), the two-phase 220V voltage between the power terminals R, S, and T is measured to ensure that the power supply is normal;

2: Make sure the torque analog differential input or single-ended input wiring is correct;

3: Do not turn on the servo enable signal for the time being, check whether there is an alarm, if there is no alarm, the work is normal, and you can proceed to the next step;

4: Start to adapt the motor control parameters:

a) Enter the parameter modification mode "P-", modify the operation password (parameter P-000) to 385, and then modify the motor series (parameter P-099) and motor code (parameter P-002) to the required motor model, the motor Please refer to the motor adaptation table in chapter 7.2 for the model code. In this example, P-002 is set to 37;

b) Enter the parameter management mode "E-", and perform the operation of restoring the default value as shown in the figure below;

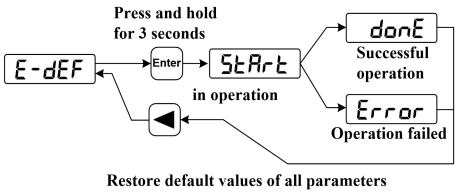

c) After the operation of restoring the default value is successful, set several key parameters of torque control (as shown in Table 8.3), and then switch the menu to "E-SEt" and press the Enter key for 3 seconds to save the parameters. Save After the success, power off and restart. After confirming that there is no error, the host computer can give the external enable signal SON (or internal enable: P-098 is set to 1), the analog automatic zero adjustment operation can be performed (See chapter 3.6.2 for details), give the analog command, observe the motor operation effect, and modify the gain adjustment operation characteristics appropriately.

Table 8.3 Key parameter settings of torque control mode

Parameter	Name	Settings	Parameter Description
P-004	Control Mode	2	Set to torque control mode
P-026	Torque command source	0 (default)	0: Analog torque 1: Internal multi-stage torque <4 optional P145~P148 settings>
P-053	Analog torque command gain	30 (default)	Percentage of motor rated torque corresponding to 1V analog voltage (unit: 1%/V)

P-054	Analog torque command zero offset compensation	Set as needed	Unit: 0.1mv
P-055	Analog torque command direction	0 (default)	0: normal direction 1: Invert the direction
P-078	Speed limit during torque control	1000 (default) Set as needed	Unit: r/min

8.5 Debugging typical problems and countermeasures

①. Error when restoring default parameters.

a. Confirm whether the operation password (P-000) is set correctly;

b. Restoring the default operation must be performed under the condition that the driver is disabled (SON is invalid and P-098 is 0);

②. The host computer is enabled, and the green light of the drive (RUN) is not on.

a. Check whether the L1/L2 voltage of the power supply is low and whether the wiring is correct;

b. Check the CN1 interface, whether the +24V input is correct;

c. Check whether the SON signal of the CN1 interface is connected to 0V;

d. Through the above measures, if the green light (RUN) is still not on, the internal enable (P098 is set to 1) can be used to try again.

③. "Err 9/Err 10/Err 30/Err 31/Err 32/Err 33" fault alarm occurs

Note: The photoelectric encoder at the end of the servo motor is a typical fragile and vulnerable component, special attention should be paid to protection!

a. The above alarm indicates that there is a problem with the encoder or the connecting cable of the encoder;

b. Check whether the shielding layer is well grounded at both ends, and whether the plug has water or impurities;

c. Whether the connection line is too long will attenuate the encoder power supply 5V;

d. Confirm whether it is an interference problem, and whether there is a strong magnetic circuit nearby, and if so, isolate it as much as possible.

④. Noise or vibration (high frequency) occurs during the operation of the servo motor

a. Appropriately increase the filter coefficients P-007 and P-019, each adjustment is 5;

b. If the effect of increasing the filter coefficient is not obvious, it is necessary to reduce the proportional gain of the speed loop and the proportional gain of the position loop, that is, reduce P-005 and P-009, and the adjustment amount is 5 each time;

c. If the above measures have no obvious improvement, please check whether there is interference in the encoder connection line, and check whether both ends of the shielding layer are well grounded.

⑤. Vibration (low frequency) occurs during the operation of the servo motor

a. Determine whether the load and inertia of the servo motor are within the allowable range of the motor. If the load and inertia exceed the rated multiple of the motor too much (the load torque is greater than 3 times, and the inertia is greater than 5 times), please re-select a larger size the motor;

b. Properly increase the proportional gain of the speed loop P-005, each adjustment is 5;

c. If the effect of increasing P-005 is not obvious, the filter coefficient P-007/P-019 can be appropriately decreased, and the adjustment amount is 5 each time;

d. If the effect of reducing the filter coefficient is not obvious, the position loop gain P-009 can be adjusted appropriately, and the adjustment amount is 5 each time;

e. If the above measures are not significantly improved, please check whether there is interference between the encoder connecting line and the command connecting line, and check whether both ends of the shielding layer are well grounded.

⑥.The drive has Err 2 or Err 11 alarm

To judge whether the drive alarms when it is powered on or alarms when it has large inertia and frequent acceleration and deceleration:

a. If the power is turned on, the alarm will confirm that the hardware circuit of the driver is faulty;

b. If the alarm occurs during frequent acceleration and deceleration due to large inertia, first check the monitoring menu d-I and d-pI, and observe whether the instantaneous value and maximum value of the current exceed the allowable range of the drive and motor. If it exceeds the range, reduce the inertia acceleration accordingly (speed mode : Increase the acceleration time P-060 and deceleration time P-061; position mode: increase the acceleration and deceleration time of the upper computer controller), so that the current is controlled within the allowable range of the drive and motor, and check whether the fault disappears.

⑦. When the servo motor starts, the driver will display "Err 5/Err12"

a. The appearance of "Err 5" indicates that the frequency of the pulse command sent by the host computer is too fast, which exceeds the response capability of the servo motor. It is recommended to increase the acceleration and deceleration time of the host computer, or appropriately increase the position command smoothing time P-040, and the adjustment amount each time is 10;

b. The above measures are invalid or the host computer cannot be modified, please set P-116 to 32 to shield the "Err 5" alarm (it needs to be powered off and restarted to take effect);

c. If "Err 12" overcurrent alarm appears in the driver during startup, it means that the load of the motor is too large during startup. Please check whether the driver is too small or the driver is damaged.

⑧. "Err 4" appears on the drive during the operation of the servo motor

a. If the low-speed operation is normal, and “Err 4” appears in the high-speed operation, please first check whether the maximum speed limit of P-075 is too low, and then appropriately increase the position loop gain P-009 (the adjustment amount is 5 each time), or properly Increase the position out-of-tolerance detection range P-080;

b. If you only need to give the position command, no matter what the speed, the motor will appear "Err 4" as soon as it runs, please confirm whether the motor is blocked or damaged, and whether the strong current circuit of the driver is damaged;

c. If "Err 4" appears when the acceleration is fast during operation, please confirm whether the selection of the driver and motor is too small;

d. If "Err 4" appears occasionally during operation, please check whether there is interference between the encoder cable and the command cable, and check whether the shielding layer is well grounded at both ends.

⑨. The drive is running normally, but the host computer appears "Position tracking error is too large"

a. Determine the detection threshold of the position tracking error of the host computer, and set the detection range P-080 of the position error of the drive to a value smaller than the threshold, and observe whether the drive appears "Err 4" during operation;

b. If "Err 4" does not appear in the driver, it means that the encoder signal sent back to the host computer on the command connection line has interference. Please check whether the connection line is soldered reliably and whether both ends of the shielding layer are well grounded;

c. If the driver shows "Err 4", it means that it is the response problem of the driver and the motor. Please confirm the integrity of the driver and the motor first, and then increase the position loop and speed loop gain P-009/P-005;

d. If the above measures have no obvious effect, consider selecting a larger size driver and motor.

Chapter 9 Communication Function Description

9.1 Function overview and wiring diagram

The T3DF servo driver has an RS-485 serial communication interface, which can be used to control the servo system, change parameters and monitor the status of the servo system through the MODBUS protocol. The wiring instructions of the communication port CN3/CN4 are as follows:

The communication port of the T3DF driver uses three-position terminals. The shape and pin distribution are as follows:

Pin number	CN3	名称	CN4	名称	图示
1					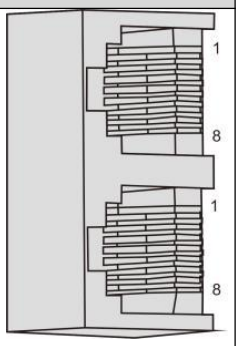
2					
3					
4	485_B	RS485 communication port	485_B	RS485 communication port	
5	485_A		485_A		
6					
7	485_Ground	485 signal ground	485_Ground	485signal ground	
8					

Special note: RS485 communication port can also be connected through 40/41/42 of CN1, see section 2.4 for details.

9.2 Communication parameters

P-181	Drive communication ID number	Range	Default value	Unit
		-1～32	1	

When using RS-485 communication, the host controller is the master and the servo drive is the slave. The communication address of the servo drive needs to be set to a different communication station number by this parameter. The setting range of the station number address is -1 to 32. The default value of -1 means to close the communication function, and the setting value greater than 0 means to open the communication function. Before using the communication function, this parameter must be set to the required station number. This station number represents the absolute address of the drive in the communication network. Only one station number can be set for a group of servo drives.

P-182	MODBUS communication baud rate	Range	Default value	Unit
		0～3	2	

Use this parameter to select the baud rate of RS-485 communication. Different

values correspond to different baud rates. The selected communication baud rate must be consistent with the communication baud rate of the host controller. The specific setting values are as follows:

Parameter meaning:

0: The baud rate is 4800bps 1: The baud rate is 9600bps

2: The baud rate is 19200bps 3: The baud rate is 38400bps

P-183	MODBUS communication data mode selection (For the time being, only RTU data format is supported)	Range	Default value	Unit
		0～5	1	

Use this parameter to select the data mode of RS-485 communication. The selected data mode must be consistent with the communication protocol of the host controller. The specific parameter values are as follows:

0: Data bits - 8 bits Parity bits - none Stop bits-1 bits

1: Data bits - 8 bits Parity bits - Even parity (Even) Stop bits - 1 bits

2: Data bits - 8 bits Parity bits - Odd parity (Odd) Stop bits - 1 bits

3: Data bits - 8 bits Parity bits- none Stop bits-2 bits

4: Data bits - 8 bits Parity bits - Even parity (Even) Stop bits - 2 bits

5: Data bits - 8 bits Parity bits - Odd parity (Odd) Stop bits - 2 bits

9.3 MODBUS communication protocol

When using RS-485 serial communication, each servo drive must set its communication station number in parameter P-181 in advance, and the computer or the host controller controls the corresponding servo drive according to the station number; the baud rate needs to refer to the host Set the parameter P-182 according to the communication mode of the controller; MODBUS communication protocol only supports the RTU (Remote Terminal Unit) mode temporarily, the user can set the required communication data mode on the parameter P-183 according to the requirements of the upper controller . After the above parameter settings are completed, the parameter saving operation needs to be performed and the drive will be powered off and restarted to take effect. The following describes the details of MODBUS communication.

Communication data structure:

RTU mode:

The MODBUS application layer protocol defines a simple protocol data unit (PDU), as shown in the figure below, which does not depend on the underlying communication layer.

Address field	Function code	Data field	Check code

MODBUS takes the address field as the beginning of the frame, the content of the address field is the effective address value (0~247), the host places the slave address value in the address field of the request message to determine the recipient of the request message, and the qualified slave machine After receiving the information

and completing the corresponding processing, place its own address value in the address field of the response information, so that the host knows which slave is sending the response.

After the address field is the function code, which indicates what the slave will do. After the function code is the data field. The data field contains the parameters of the request and response. The format, length and meaning of the data field are also different according to the different function codes.

The check code is used to verify the validity of information and ensure the reliability of information transmission. In RTU mode, a 16-bit CRC (Cyclical Redundancy Check) check is used.

In RTU mode, each 8-bit one-byte data in the information frame is sent in two 4-bit hexadecimal codes, for example: 1byte data 64H.

The RTU mode is a bit-oriented transmission mode. The frame starts with an idle time of no less than 3.5 characters, and then the address field is sent. The online device monitors the communication bus. When the idle time of 3.5 characters is continuously monitored, the frame can be received. Address field information, when it is judged that the received address field information is valid, continue to receive subsequent information, and then perform corresponding operations according to the function code and additional information. If response information is required, the response information is packaged and sent to the host. The last transmitted byte indicates the end of the information frame after approximately 3.5 characters of idle time, and a new information frame can be sent. The RTU mode relies on analog synchronization information to maintain frame synchronization, and the entire information frame must be transmitted as a continuous data stream at one time. If the receiving device detects that there are more than 1.5 character intervals during the transmission of a continuous data stream, it is considered that one frame of data has been received, and the next received character is regarded as the beginning of the next frame. Under normal circumstances, the interval time between information frames is at least 3.5 characters, that is, after one frame of data is sent, at least 3.5 characters of idle time can be passed before the next frame of data can be sent.

The information frame format in RTU mode is:

START	**Address field (ADR)**	**Function code (CMD)**	**Data field (DATA)**	**Check code (CRC)**	**END**
T1-T2-T3-T4	8 bits	8 bits	n*8 bits	16 bits	T1-T2-T3-T4

Note: T1-T2-T3-T4 means that the time interval with the previous frame is at least 3.5 character time.

In RTU mode, the format of sending each byte is:

Start bit	Data bits (low bit first)	Parity bit	Stop bit
1 bit	8 bits	1 bit or no bit	1 bit or 2 bits

- Character structure:

10bits character box (for 8bits characters without verification)

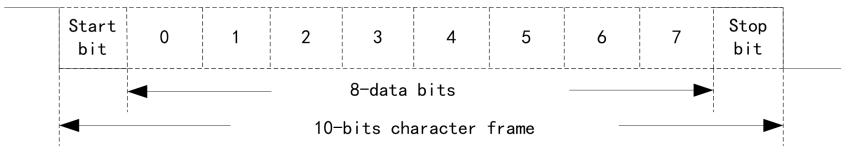

(8 bits of data + no parity + 1 stop bit)

11bits character box (for 8bit characters plus check)

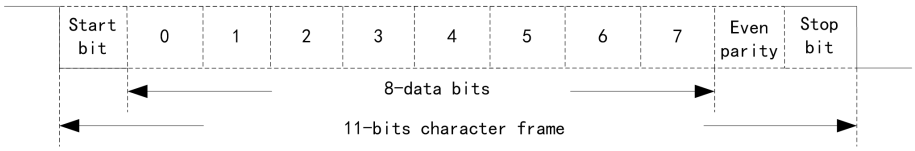

(8-bit data + even parity + 1 stop bit)

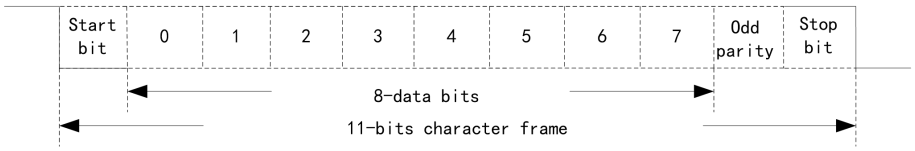

(8-bit data + odd parity + 1 stop bit)

■ **Communication information frame format:**

The items in the Communication Information Frame Format box are explained as follows:

➢ **START (communication start)**

RTU mode: The minimum time interval with the previous frame is 3.5 character time.

➢ **ADR (communication address)**

The legal communication address range is between 1 and 32, as shown below: Communicate with the servo drive whose station number is 16 (hexadecimal 10H):

RTU mode: ADR = 10H

➢ **CMD (function code) and DATA (data field)**

The format of data characters depends on the function code. Commonly used function codes are described as follows:

Command code 03H: read the parameter value of the drive

Command code 04H: Read the running state of the drive (such as motor speed, position, current, torque and other variable values)

Command code 06H: Write parameters to the drive (single write)

Command code 41H: Write the parameters of the drive into EEPROM (parameter saving)

➢ **CRC (RTU mode) frame check calculation:**

RTU mode:

RTU mode adopts CRC (Cyclical Redundancy Check) frame check. The calculation of CRC frame check is explained in the following steps:

Step 1: Initialize a 16bits register whose content is FFFFH, which is called a CRC register.

Step 2: XOR the first byte of the command information with the low byte of the 16-bitsCRC register, and store the result back into the CRC register.

Step 3: Check the least significant bit (LSB) of the CRC register. If this bit is 0, then shift to the right by one; if this bit is 1, the CRC register value is shifted to the right by one bit, and then XOR is performed with A001H.

Step 4: Go back to Step 3 until Step 3 has been executed 8 times, then go to Step 5.

Step 5: Repeat steps 2 to 4 for the next byte of the command information, until all bytes have completed the above processing, and the content of the CRC register is the CRC frame check.

Note: After calculating the CRC frame check, in the command information, the low CRC must be filled first, and then the high CRC must be filled. Please refer to the following example.

For example: read the 0-segment 05 parameter of the servo drive whose station number is 01H. The last content of the CRC register calculated from the ADR to the last byte of the data is 3794H, then its command information is as follows. It should be noted that byte 94H should be transmitted before byte 37H.

ADR	01H
CMD	03H
Start data Location	00H (high byte)
	05H (low byte)
Number of data	00H (high byte)
	02H (low byte)
CRC Low	94H (high byte)
CRC High	37H (low byte)

➢ **END (end of communication):**

RTU mode: The minimum time interval with the next frame is 3.5 character time.

■ **Function code (CMD):**

The function code is 1 byte (8bits), and its range is 1 ~ 255.

Function code (HEX)	**Specific meaning**	**Meaning in the Modbus Protocol Specification**
03H	Read the parameter value of the drive (multiple parameters can be read at the same time)	Read Holding Register
04H	Read the operating state of the drive (such as motor speed, position, current, torque and other variable values, multiple states can be read at the same time)	Read Input Register
06H	Parameters written to the drive (single write)	Write Single Register
10H	Parameters written to the drive (multiple writes)	Write Multiple Register

08h	Diagnostic function	Diagnostic
41H	Write the parameters of the drive into EEPROM (parameter saving)	

Various exceptions and errors may occur during communication. In order to enable these exceptions and errors to be recognized by the host, corresponding exception codes are defined, as shown in the following table. When the slave receives the information from the master and finds an error or cannot complete the normal response, the slave will send an error response frame to the master, that is, the highest bit of the function code byte is 1, and the corresponding exception code (Exception Code) is placed in the data field.

Exception Code（HEX）	Mean
01h	ILLEGAL FUNCTION
02h	ILLEGAL DATA ADDRESS
03h	ILLEGAL DATA VALUE
04h	SLAVE DEVICE FAILURE
05h	ACKNOWLEDGE
06h	SLAVE DEVICE BUSY

9.4 Writing and reading of parameters

For details of all parameters of the servo drive, please refer to the parameter chapter of the commissioning manual. The parameters are divided into parameter sections. Each parameter is represented by 16bits data, and the communication address of each parameter is determined by the parameter serial number (range 0~249). For example, the communication address of parameter P-005 is 005 (decimal), and the communication address of parameter P-108 is is 108 (decimal), the communication address of parameter P-204 is 204 (decimal), and other parameters are deduced by analogy.

All parameters described in the parameter section can be read through communication, but only some of the parameters are open to allow users to modify and write. The parameters listed in the debugging manual are allowed to be modified and written. Other parameters that are not described are reserved by the servo drive. parameters (the user cannot write the reserved parameters, otherwise the servo drive may run abnormally). If the user needs to modify other parameters, please contact the technical staff of our company.

9.5 Description of monitoring state quantity address

The internal state quantity of the servo drive can be read out through the RS-485 communication port, and the write operation is invalid. The state quantity is stored in 16-bit data, providing a total of 40 state variables from 0 to 39. The reading of the state quantity can be realized by the following two function codes:

(1) Function code (04H), address range 0x0000~0x0027
(2) Function code (03H), address range 0x1000~0x1027

The address (hexadecimal) of the function code (04H) to read the state quantity is as follows:
0x0000: Motor speed, unit "r/min";
0x0001: low 16 bits of the original position command (input pulse);
0x0002: high 16 bits of the original position command (input pulse);
0x0003: Position command (pulse) low 16bits;
0x0004: Position command (pulse) high 16bits;
0x0005: The current motor position (pulse) low 16bits;
0x0006: The current motor position (pulse) high 16bits;
0x0007: The position deviation (pulse) low 16bits;
0x0008: The position deviation (pulse) high 16bits;
0x0009: Motor torque, unit "%" (percentage of rated torque);
0x000A: peak torque, unit "%" (peak torque within 1s); <10>
0x000B: Motor instantaneous current, unit "0.1A" (12: Indicates motor real-time current 1.2A);
0x000C: Motor peak current, unit "0.1A" (152: indicates that the maximum current within 1s is 15.2A);
0x000D: Position command pulse frequency, unit "0.1kHz" (3000: means 300kHz);
0x000E: Speed command, unit "r/min";
0x000F: Torque command, unit "%"; <15>
0x0010: Speed analog command voltage, unit "mV";
0x0011: Torque analog command voltage, unit "mV";
0x0012: Input terminal DI status, [Note 1];
0x0013: Output terminal DO status, [Note 2];
0x0014: Motor encoder single-turn absolute position (pulse) low 16bits; <20>
0x0015: Motor encoder single-turn absolute position (pulse) high 16bits;
0x0016: Motor encoder multi-turn position (when there is no multi-turn information, read 0 value);
0x0017: Regenerative braking load rate, unit "%";
0x0018: Average load rate, unit "%";
0x0019: Output voltage, unit "%"; <25>
0x001A: Alarm code;
0x001B: Motor speed, unit "0.1r/min";
0x001C: The second encoder position (pulse) low16 bits;
0x001D: The second encoder position (pulse) high 16bits;
0x001E: Reserved <30> DC bus voltage
0x001F: low 16bits of absolute position of the motor (32-bit absolute position of multi-turn + single-turn data splicing)
0x0020: high 16bits of absolute position of the motor (32-bit absolute position of multi-turn + single-turn data splicing)
0x0021: reserved

0x0022: reserved
0x0023: Reserved <35>
0x0024: reserved
0x0025: reserved
0x0026: reserved
0x0027: Reserved <39>

The address (hexadecimal) of the function code (03H) to read the state quantity is as follows:

0x1000: Motor speed, unit "r/min";
0x1001: low 16 bits of the original position command (input pulse);
0x1002: high 16 bits of the original position command (input pulse);
0x1003: Position command (pulse) low 16bits;
0x1004: Position command (pulse) high 16bits;
0x1005: The current motor position (pulse) low 16bits;
0x1006: The current motor position (pulse) high 16bits;
0x1007: The position deviation (pulse) low 16bits;
0x1008: The position deviation (pulse) high 16bits;
0x1009: Motor torque, unit "%" (percentage of rated torque);
0x100A: peak torque, unit "%" (peak torque within 1s); <10>
0x100B: Motor instantaneous current, unit "0.1A" (12: Indicates motor real-time current 1.2A);
0x100C: Motor peak current, unit "0.1A" (152: indicates that the maximum current within 1s is 15.2A);
0x100D: Position command pulse frequency, unit "0.1kHz" (3000: means 300kHz);
0x100E: Speed command, unit "r/min";
0x100F: Torque command, unit "%"; <15>
0x1010: Speed analog command voltage, unit "mV";
0x1011: Torque analog command voltage, unit "mV";
0x1012: Input terminal DI status, [Note 1];
0x1013: Output terminal DO status, [Note 2];
0x1014: Motor encoder single-turn absolute position (pulse) low 16bits; <20>
0x1015: Motor encoder single-turn absolute position (pulse) high 16bits;
0x1016: Motor encoder multi-turn position (when there is no multi-turn information, read 0 value);
0x1017: Regenerative braking load rate, unit "%";
0x1018: Average load rate, unit "%";
0x1019: Output voltage, unit "%"; <25>
0x101A: Alarm code;
0x101B: Motor speed, unit "0.1r/min";
0x101C: The second encoder position (pulse) low16 bits;
0x101D: The second encoder position (pulse) high 16bits;
0x101E: Reserved <30> DC bus voltage

0x101F: low 16bits of absolute position of the motor (32-bit absolute position of multi-turn + single-turn data splicing)
0x1020: high 16bits of absolute position of the motor (32-bit absolute position of multi-turn + single-turn data splicing)
0x1021: reserved
0x1022: reserved
0x1023: Reserved <35>
0x1024: reserved
0x1025: reserved
0x1026: reserved
0x1027: Reserved <39>

[Note 1]: The data read from this address is 16bit, of which bit5~bit0 correspond to the input status of DI6~DI1 respectively, "1" means input high level, "0" means input low level; bit15~bit6 are reserved bit.

[Note 2]: The data bits read from this address are 16 bits, of which bit5~bit0 represent the output status of DO6~DO1, "1" means output high level, "0" means output low level; bit15~bit6 are reserved bits .

9.6 Communication example

9.6.1 Read status (CMD=04H)

The read status function code (04H) can be used to read all monitoring status quantities in the servo drive. The description of the communication frame format is as follows:

Note: The number of states read each time is up to 8.

The request frame format is as follows:

Address field 1 byte	function code 1 byte	Start Address 2 bytes, high byte first	Read Status Number 2 bytes, high byte first	CRC check code 2 bytes, low byte first
0x01	0x04	0x00，0x00	0x00，0x01 (**N**)	CRC_Lo, CRC_Hi

Normal response:

Address field 1 byte	function code 1 byte	The number of bytes occupied by the Status 1byte	Status value, 2N bytes, high byte first	CRC check code 2 bytes, low byte first
0x01	0x04	0x02 (**2N**)	0xXX，0xXX，……	CRC_Lo, CRC_Hi

Exception response:

Address field 1 byte	function code 1 byte	Exception code1byte	CRC check code 2 bytes, low byte first
0x01	0x84	0x01 or 02 or 03 or 04	CRC_Lo, CRC_Hi

An example is as follows:

Host sends frame:

ADDR	CODE	STADDR_H	STADDR_L	RNUM_H	RNUM_L	CRC_L	CRC_H
0x01	0x04	0x00	0x01	**0x00**	**0x02**	0xXX	0xXX

Slave response frame:

ADDR	CODE	BYTE_NUM	DATA1_H	DATA1_L	DATA2_H	DATA2_L	CRC_L	CRC_H
0x01	0x04	**0x04**	0xXX	0xXX	0xXX	0xXX	0xXX	0xXX

STADDR: read status start address

RNUM: The number of status read

BYTE_NUM: The number of bytes occupied by the read status (for example, if RNUM is 2, that is, 2 pieces of 16-bit data, then BYTE_NUM is 2*2 = 4 bytes)

DATAX: Status value read back, X represents the serial number, DATA1 is the first data, DATA2 is the second data

In this example, STADDR = 0x0001 and RNUM = 0x02 in the sending frame, which means that starting from the starting address 0x0001, two status data are read (that is, two status values with addresses 0x0001 and 0x0002 are read, and the specific

meaning is described in the previous section).

In the response frame, BYTE_NUM = 0x04, indicating that the two read status values occupy 4 bytes, followed by DATA1 and DATA2, which are the status values at addresses 0x0001 and 0x0002.

9.6.2 Read parameter (CMD=03H)

All parameters in the drive can be read by using the read parameter function code (03H). The communication frame format is described as follows:

Note: The maximum number of parameters read each time is 8.

The request frame format is as follows:

Address field 1 byte	function code 1 byte	Start Address 2 bytes, high byte first	Read Parameter Number 2 bytes, high byte first	CRC check code 2 bytes, low byte first
0x01	0x03	0x00，0x00	0x00，0x01（**N**）	CRC_Lo, CRC_Hi

Normal response:

Address field 1 byte	function code 1 byte	The number of bytes occupied by the parameter 1 byte	Parameter value 2N bytes, high byte first	CRC check code 2 bytes, low byte first
0x01	0x03	0x02（**2N**）	0xXX，0xXX，……	CRC_Lo, CRC_Hi

Exception response:

Address field1 byte	function code 1 byte	Exception code1byte	CRC check code 2 bytes, low byte first
0x01	0x83	0x01 or 02 or 03 or 04	CRC_Lo, CRC_Hi

An example is as follows:

Host sends frame:

ADDR	CODE	STADDR_H	STADDR_L	RNUM_H	RNUM_L	CRC_L	CRC_H
0x01	0x03	0x00	0x01	**0x00**	**0x02**	0xXX	0xXX

Slave response frame:

ADDR	CODE	BYTE_NUM	DATA1_H	DATA1_L	DATA2_H	DATA2_L	CRC_L	CRC_H
0x01	0x03	**0x04**	0xXX	0xXX	0xXX	0xXX	0xXX	0xXX

STADDR: read parameter start address

RNUM: Number of parameters read

BYTE_NUM: The number of bytes occupied by the read parameters (for example, if RNUM is 2, that is, 2 pieces of 16-bit data, then BYTE_NUM is 2*2 = 4)

DATAX: The parameter value read back, X represents the serial number, DATA1 is the first parameter, DATA2 is the second parameter

In this example, STADDR = 0x01 and RNUM = 0x02 in the transmission frame, which means that starting from the starting address 1, two parameters are read (that is, two parameters P-001 and P-002 with addresses 0x01 and 0x02 are read.

In the response frame, BYTE_NUM = 0x04, which means that the two parameter values read occupy 4 bytes, followed by DATA1 and DATA2, which are the parameter values at addresses 0x01 and 0x02.

9.6.3 Write a single parameter (CMD=06H)

The parameters listed in the debugging manual can be written in the parameter writing function code (06H). The communication frame format is explained as follows:

Note: Function code 06H can only write one parameter at a time. Before writing parameters, please refer to the parameter manual to confirm the specific meaning of the parameters. Wrongly writing parameter values may cause abnormal operation of the servo drive!

The request frame format is as follows:

Address field 1 byte	function code 1 byte	parameter number 2 bytes, high byte first	Write parameter value 2 bytes, high byte first	CRC check code 2 bytes, low byte first
0x01	0x06	0x00，0x00	0x00，0x64	CRC_Lo, CRC_Hi

Normal response:

Address field 1 byte	function code 1 byte	parameter number 2 bytes, high byte first	Write parameter value 2 bytes, high byte first	CRC check code 2 bytes, low byte first
0x01	0x06	0x00，0x00	0x00，0x64	CRC_Lo, CRC_Hi

Exception response:

Address field 1 byte	function code 1 byte	Exception code1byte	CRC check code 2 bytes, low byte first
0x01	0x86	0x01 or 02 or 03 or 04	CRC_Lo, CRC_Hi

An example is as follows:

Host sends frame:

ADDR	CODE	WADDR_H	WADDR_L	VALUE_H	VALUE_L	CRC_L	CRC_H
0x01	0x06	0x00	0x01	0x01	0x02	0xXX	0xXX

Slave response frame:

ADDR	CODE	WADDR_H	WADDR_L	VALUE_H	VALUE_L	CRC_L	CRC_H
0x01	0x06	0x00	0x01	0x01	0x02	0xXX	0xXX

WADDR: write parameter address

VALUE: the value to write

In this example, ADDR = 0x01 and VALUE = 0x0102 in the sending frame, which means that the value 0x0102 is written into the parameter whose address is 0x01.

The response frame is the same as the send frame.

9.6.4 Write multiple parameters (CMD=10H)

The parameters listed in the debugging manual can be written in the parameter writing function code (10H). The communication frame format is described as follows:

Note: Function code 10H can write multiple parameters at a time (the maximum number of parameters written in a single time is 10). Before writing parameters, please refer to the parameter manual to confirm the specific meaning of the parameters. Wrongly writing parameter values may cause abnormal operation of the servo drive!

The request frame format is as follows:

Address field 1 byte	function code 1 byte	starting address value, 2 bytes, high byte first	The number of parameters written, 2 bytes, High byte first (1~122)	The number of bytes occupied by the parameter, 1byte (0~255)	parameter value, 2N bytes, high byte first	CRC check code 2 bytes, low byte first
0x01	0x10	0x00，0x00	0x00，0x02 **(N)**	0x04 **(2N)**	0xXX，0xXX，……	CRC_Lo, CRC_Hi

Normal response:

Address field 1 byte	function code 1 byte	starting address value, 2 bytes, high byte first	The number of parameters written, 2 bytes, high byte first	CRC check code 2 bytes, low byte first
0x01	0x10	0x00，0x00	0x00，0x02 **(N)**	CRC_Lo, CRC_Hi

Exception response:

Address field1 byte	function code 1 byte	Exception code1byte	CRC check code 2 bytes, low byte first
0x01	0x90	0x01 or 02 or 03 or 04	CRC_Lo, CRC_Hi

An example is as follows:

Host sends frame:

ADR	CODE	SADRH	SADRL	WNUMH	WNUML	WNUMB	D1_H	D1_L	D2_H	D2_L	CRCL	CRCH
0x01	0x10	0x00	0x01	**0x00**	**0x02**	**0x04**	0xXX	0xXX	0xXX	0xXX	0xXX	0xXX

Slave response frame:

ADR	CODE	SADRH	SADRL	WNUMH	WNUML	CRCL	CRCH
0x01	0x10	0x00	0x01	**0x00**	**0x02**	0xXX	0xXX

SADR: Write parameter start address SADRH (high byte) SADRL (low byte)

WNUM: The number of written parameters WNUMH (high byte) WNUML (low byte)

WNUMB: The number of bytes occupied by the written parameters (for example, if WNUM is 2, that is, 2 pieces of 16-bit data, then WNUMB is 2*2 = 4)

D1_H: The high byte value of the first parameter written

D1_L: The low byte value of the first parameter written

D2_H: The high byte value of the second parameter written

D2_L: The low byte value of the second parameter written

In this example, SADR = 0x01 and WNUM = 0x02 in the transmission frame, which means that starting from the starting address 1, 2 parameters are written (that is, the two parameters P-001 and P-002 with addresses 0x01 and 0x02).

9.6.5 Diagnosis function (CMD=08H)

After the master sends the diagnostic frame, the slave (servo drive) will respond with the same data.

Tip: The diagnostic function can be used to determine whether the MODBUS communication is normal.

Host sends frame:

ADDR	CODE	DATA_H	DATA_L	CRC_L	CRC_H
0x01	0x08	0x12	0x34	0xXX	0xXX

Slave response frame:

ADDR	CODE	DATA_H	DATA_L	CRC_L	CRC_H
0x01	0x08	0x12	0x34	0xXX	0xXX

The frame data that the slave responds to the diagnostic command should be exactly the same as the frame data sent by the master, so the diagnostic command can be used to check whether the communication is normal. DATA can be any custom data, for example, the host sends 0xABCD, and the slave responds with 0xABCD

9.6.6 Save parameters (CMD=41H)

The parameters of the drive can be stored in the EEPROM by using the save parameter function code (41H). The communication frame format is described as follows:

Note: After sending this command, the servo drive needs a certain time to save the parameters to the EEPROM

It is recommended that after sending this command, wait for more than 5S before

performing other operations.

The request frame format is as follows:

Address field 1 byte	function code 1 byte	CRC check code 2 bytes, low byte first
0x01	0x41	CRC_Lo, CRC_Hi

Normal response:

Address field 1 byte	function code 1 byte	CRC check code 2 bytes, low byte first
0x01	0x41	CRC_Lo, CRC_Hi

Exception response:

Address field 1 byte	function code 1 byte	Exception code1byte	CRC check code 2 bytes, low byte first
0x01	0xC1	0x01 or 02 or 03 or 04	CRC_Lo, CRC_Hi

The second way to save parameters:

Using the function code (06H) for writing a single parameter, write the value 0x1234 to the address unit 0x1001, and the drive will execute the parameter saving operation.

9.6.7 Servo enable/disable (CMD=42H)

Request/normal response:

Address field 1 byte	function code 1 byte	Enable shutdown flag 1byte	CRC check code 2 bytes, low byte first
0x01	0x42	0x55(使能) or 0xAA(关断)	CRC_Lo, CRC_Hi

Exception response:

Address field 1 byte	function code 1 byte	Exception code 1byte	CRC check code 2 bytes, low byte first
0x01	0xC2	0x01 or 02 or 03 or 04	CRC_Lo, CRC_Hi

9.6.8 Alarm clear (CMD=43H)

Request/normal response:

Address field1 byte	function code1 byte	CRC check code 2 bytes, low byte first
0x01	0x43	CRC_Lo, CRC_Hi

Exception response:

Address field1 byte	function code 1 byte	Exception code1byte	CRC check code 2 bytes, low byte first
0x01	0xC3	0x01 or 02 or 03 or 04	CRC_Lo, CRC_Hi

9.6.9 JOG jog operation (CMD=44H)

Request/normal response:

Address field1 byte	function code1 byte	Operation mode1byte	CRC check code 2 bytes, low byte first
0x01	0x44	0x03 (enable, JOG zero speed hold), 0x01 (JOG forward rotation), 0x02 (JOG reversal), 0x00 (exit JOG, break enable) Note: JOG speed is controlled by P-076 (r/min)	CRC_Lo, CRC_Hi

Exception response:

Address field1 byte	function code 1 byte	Exception code1byte	CRC check code 2 bytes, low byte first
0x01	0xC4	0x01 or 02 or 03 or 04	CRC_Lo, CRC_Hi