T3G series
AC servo driver
instruction manual
(V3.1 version)

Product introduction

T3G series digital AC servo drives are general-purpose AC servo drive products with domestic leading level. This series of products adopts advanced full digital control and AC motor vector control theory, with excellent system performance and high reliability, and is widely used in servo shaft drive of food processing, packaging machinery, textile machinery and other related automation industrial machinery.

Product Features

T3G series fully sealed design, good protection and strong anti-interference ability

The compact design of T3G series saves installation space

Integrate position control, speed control and torque control

Can drive various types of permanent magnet synchronous servo motors

Excellent low-speed torque characteristics and industry-leading dynamic acceleration and deceleration performance.

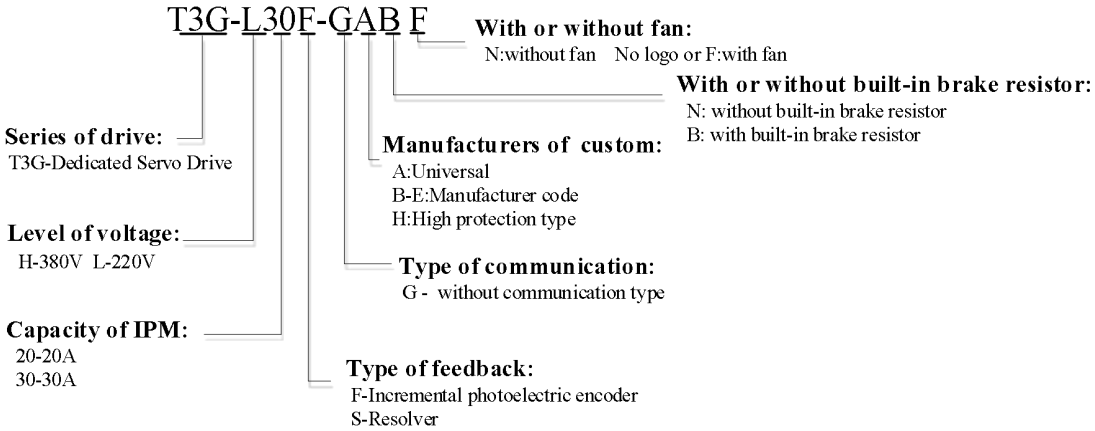

Contents

1、Installation and Wiring 1
1.1 Installation dimension drawing 1
1.2 Front panel terminal wiring diagram 1
1.3 Specifications of braking resistor 1
1.4 Connection diagram of control port CN1 and encoder port CN2 2
2、Panel operation 4
2.1 Operation panel introduction 4
2.2 Main menu 4
2.3 Status monitoring 5
2.4 Parameter settings 8
2.5 Parameter management 9
3、Parameter setting and function debugging 11
3.1 Setting driver Parameters 11
3.2 Trial run 11
3.2.1 Keyboard Speed regulation text run 11
3.2.2 Jog spot text run 12
3.3 Joint debugging with the host computer 13
3.3.1 Control parameter setting 13
3.3.2 Function debugging 16
3.4 Use of electromagnetic brake (holding brake output) function 18
3.5 Programmable digital input and output ports 20
4、Performance optimization and Adjustment 23
4.1 Control loop gain parameters 23
4.2 Performance optimization 24
5、Debug problems and processing method 25
5.1 Alarm Code 25
5.2 Alarm Cleanup method 26
5.3 Frequently debug problems and countermeasures 26
6、Drive specifications and motor adapter table 30
6.1 Model Specifications and Performance parameters 30
6.2 Standard 4 pole pairs motor table（220V） 31

1、Installation and Wiring

1.1 Installation dimension drawing

T3G-L20/L30 Installation dimensions(unit:mm)

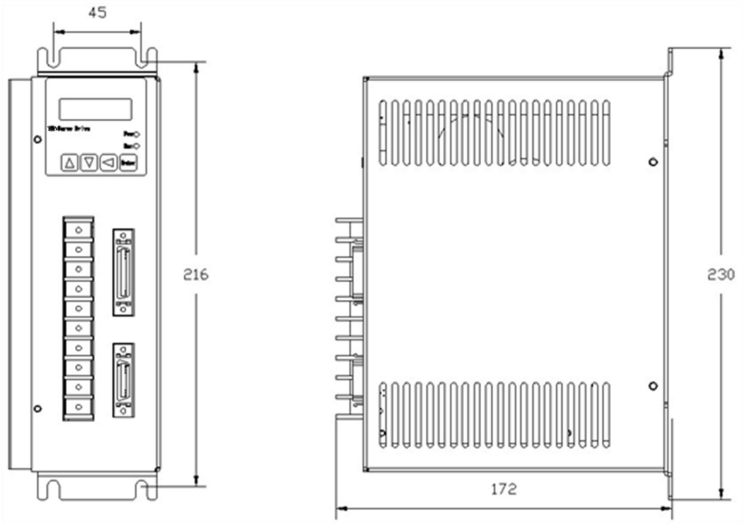

1.2 Front panel terminal wiring diagram

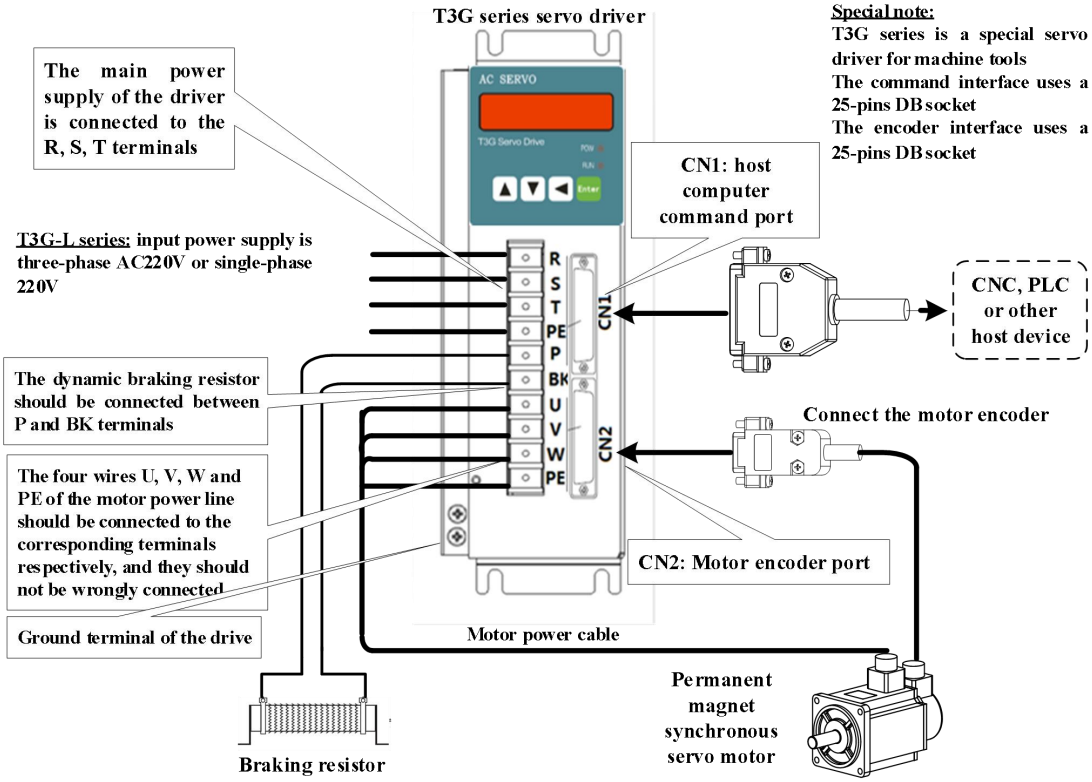

1.3 Specifications of braking resistor

T3G-L series (220V servo) braking resistor configuration table
(Standard 220V servo includes built-in resistance, and external braking resistance can be selected according to load conditions)

Model of drive	(Light Load Type) Recommended Configuration (using built-in resistor)	(Heavy duty) Recommended configuration (connect external resistor in parallel)
T3G -L20F	47Ω（built-in）	≥47Ω，power greater than 500W
T3G -L30F	47Ω（built-in）	≥47Ω，power greater than 500W

1.4 Connection diagram of control port CN1 and encoder port CN2

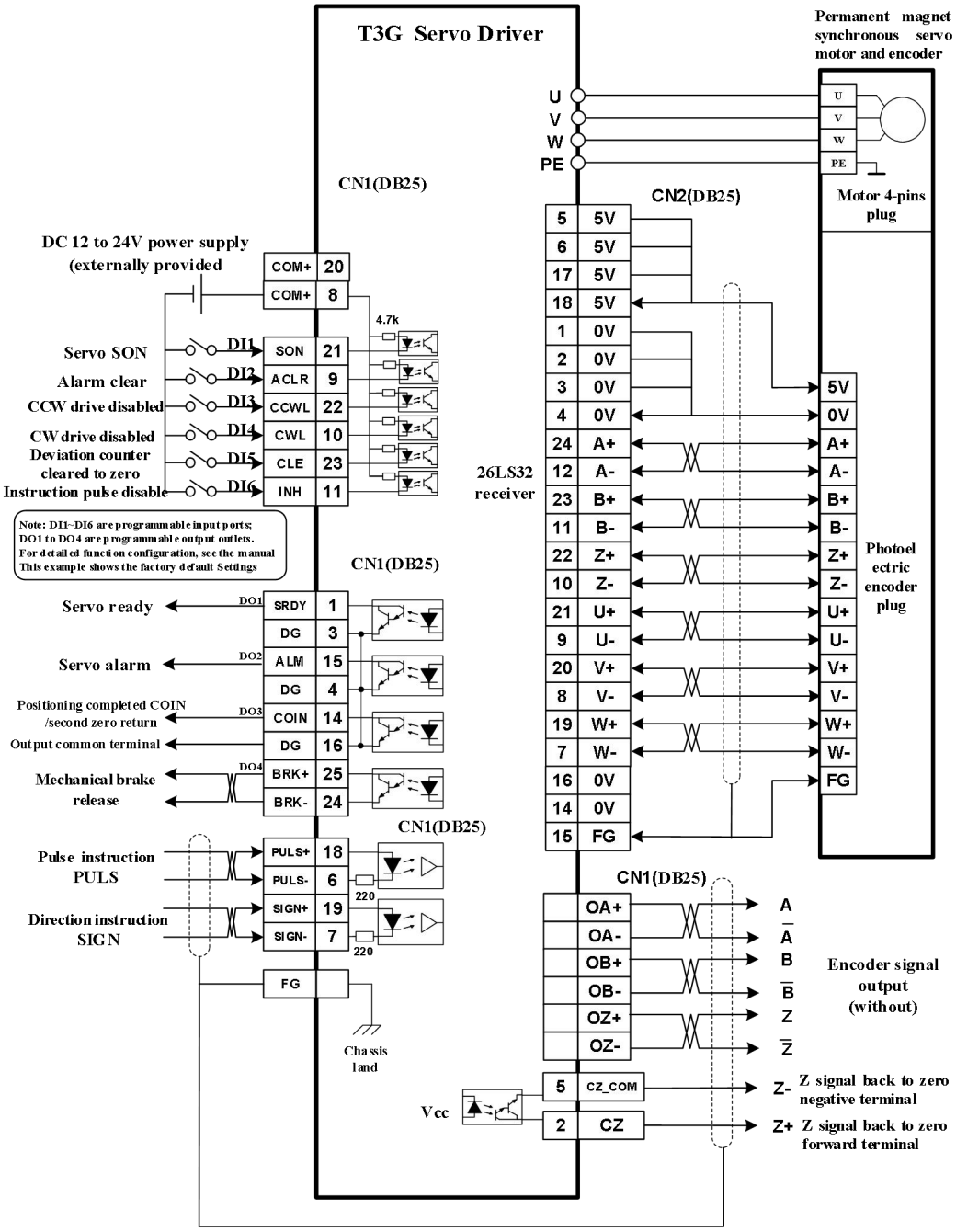

Attention:

If the pulse command signal is a 24V power supply, the resistance 2K, 5%, 0.25W must be connected in series at PULS- and SIGN-, otherwise it is possible to damage the pulse command port.

2、Panel operation

2.1 Operation panel introduction

The T3G series panel consists of 5 LED digital tube displays and 4 buttons ▲、▼、◀、Enter, which are used to display various states of the system and set parameters.

The operations are all layered operations, which are expanded layer by layer from the main menu. The operation panel is shown as below:

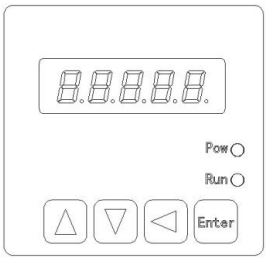

Symbol	Name	Function
POW	Power light (none)	The decimal point of the second digital tube from the left lights up to indicate that the servo is under voltage.
RUN	Running light (none)	The decimal point of the first digital tube from the left lights up to indicate that the servo is enabled.
▲	Add key	Increase the serial number or value; long press has repeat effect.
▼	Decrease key	Decrease the serial number or value; long press has repeat effect.
◀	Exit key	Menu exit, operation canceled.
Enter	Enter	Menu entry, parameter modification confirmation or operation confirmation.

2.2 Main menu

The first layer is the main menu, there are 4 operation modes, use the ▲、▼ keys to change the mode; press the Enter key to enter the second layer and perform specific operations; press the ◀ key to return to the main menu from the second layer.

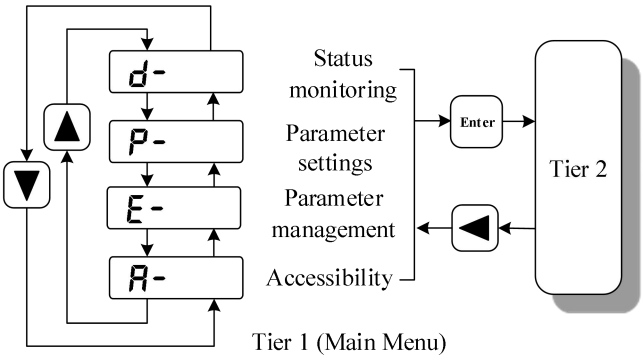

2.3 Status monitoring

Select the status monitoring "d- " in the main menu, and press the Enter key to enter the monitoring mode. There are a variety of monitoring items, the user selects the desired display item with the ▲、▼ keys, and then presses the Enter key to enter the specific display state. The specific meanings of the status monitoring display items are as follows:

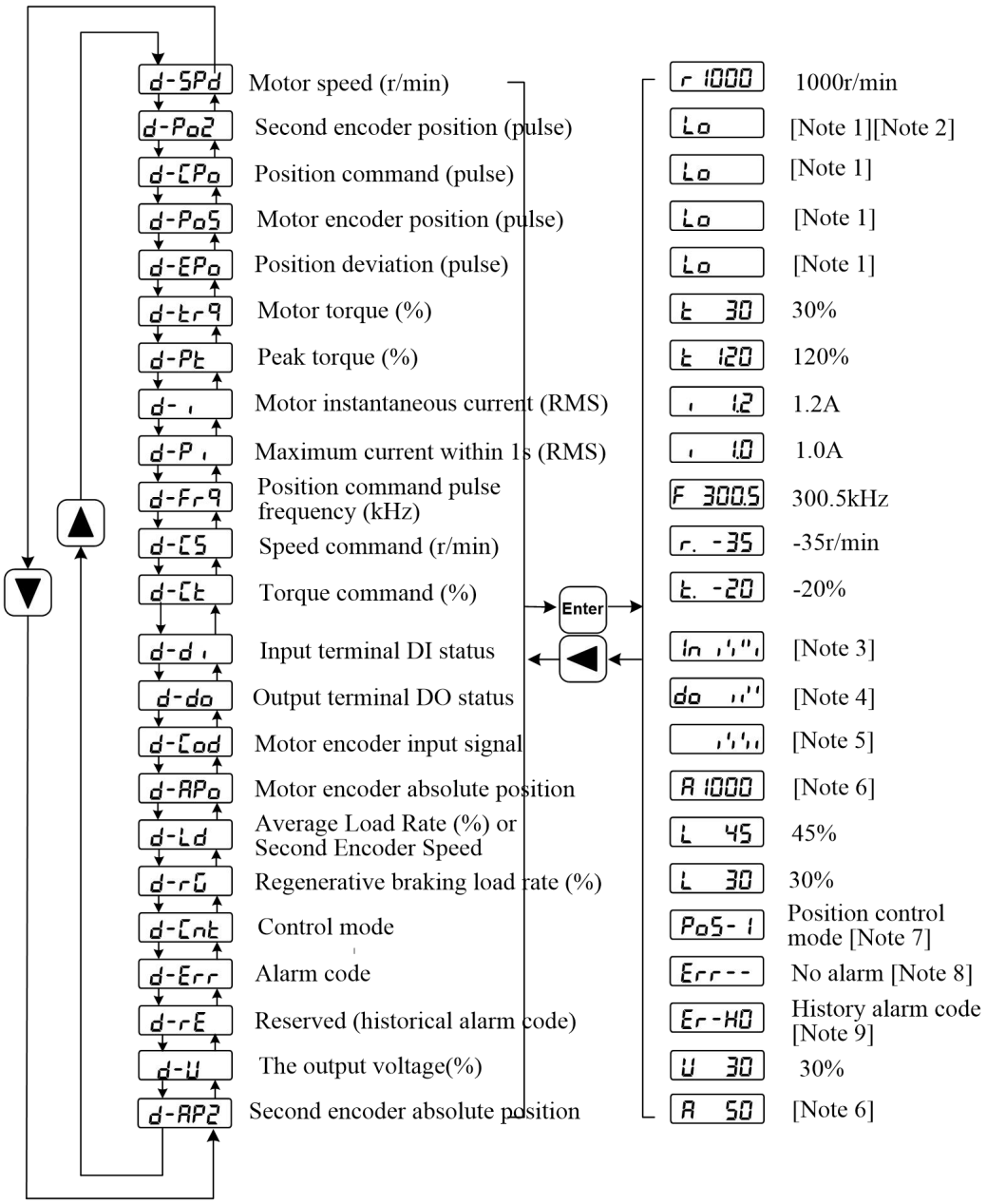

1. 32-bits binary value display[Note 1]

The range of 32-bits binary numbers is -2147483648～2147483647, which is represented by the combination of low and high bits. Select the low and high bits through the menu, and use the formula in the figure to synthesize the complete value.

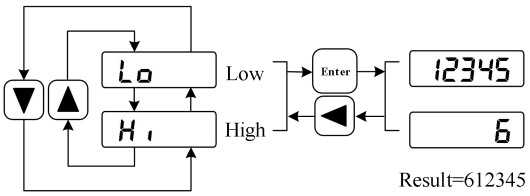

32-bits value=High value×100000+Low value

2. Pulse unit [Note 2]

The pulse unit is the encoder pulse unit. Take the use of a 2500 lines encoder as an example:

$$\begin{aligned}\text{Encoder pulse unit} &= \text{Encoder resolution}\\ &= 4\times\text{Number of encoder lines}\\ &= 4\times 2500(\textit{pulse/rev})\\ &= 10000(\textit{pulse/rev})\end{aligned}$$

3. Input terminal DI [Note 3]

The vertical line of the digital tube represents the state of one bit, the stroke on the vertical line lights up to indicate ON, and the lower stroke lights up to indicate OFF.

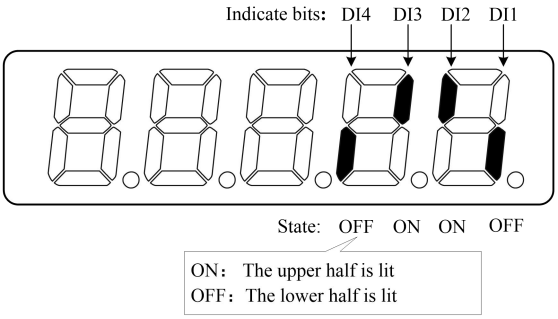

4. Output terminal DO[Note 4]

The vertical line of the digital tube represents the state of one bit, the stroke on the vertical line lights up to indicate ON, and the lower stroke lights up to indicate OFF.

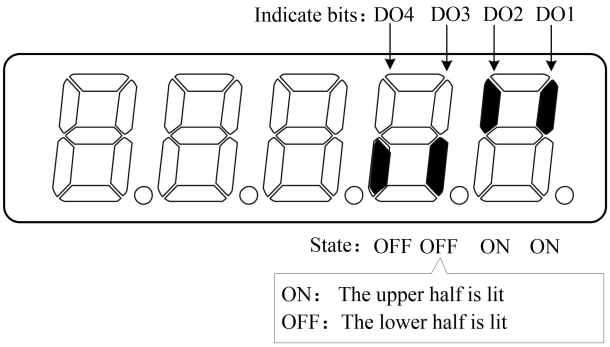

5. Encoder input signal [Note 5]

The vertical line of the digital tube represents the state of one bit, the stroke on the vertical line is lit to indicate a high level, and the lower stroke is lit to indicate a low level. (Note: absolute position encoder, this display is meaningless)

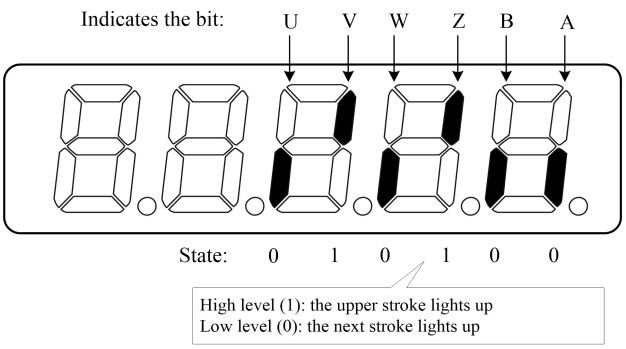

6. Rotor single-turn position [Note 6]

Indicates the position of the rotor relative to the stator in a revolution, one revolution is a cycle, the unit is the minimum resolution of the encoder, and take the encoder Z pulse as the origin.

2500 lines encoder:The range is 0～9999 (decimal system), and the value is 0 when the Z pulse appears.

Absolute position encoder:The range is 0～65535 (decimal system), indicates by high/low bits.

7. Control method [Note 7]

T3G display characters represent the current control mode of the servo driver.

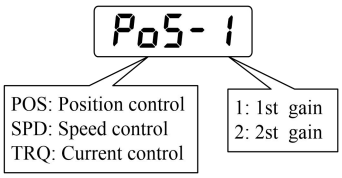

8. Alarm code [Note 8]

No alarms show two minus signs. When there is an alarm, the alarm number is displayed and flashes. When the alarm occurs, the display will automatically enter the state monitoring and display the alarm number, but other operations can be performed through the keyboard. When it is not in the monitoring state, the decimal point of the rightmost digital tube flashes to indicate that there is an alarm. Specific examples are as follows:

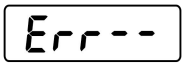

No alarm

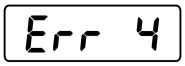

Flicker Alarm No. 4

9. Historical alarm code [Note 9]

The historical alarm code displays the latest 10 alarm contents of the driver, two minus signs are displayed when there is no alarm, and the alarm number is displayed when there is an alarm. When an alarm occurs, the driver will automatically update and store the alarm number. The historical alarm code viewing operation and specific display contents are explained as follows:

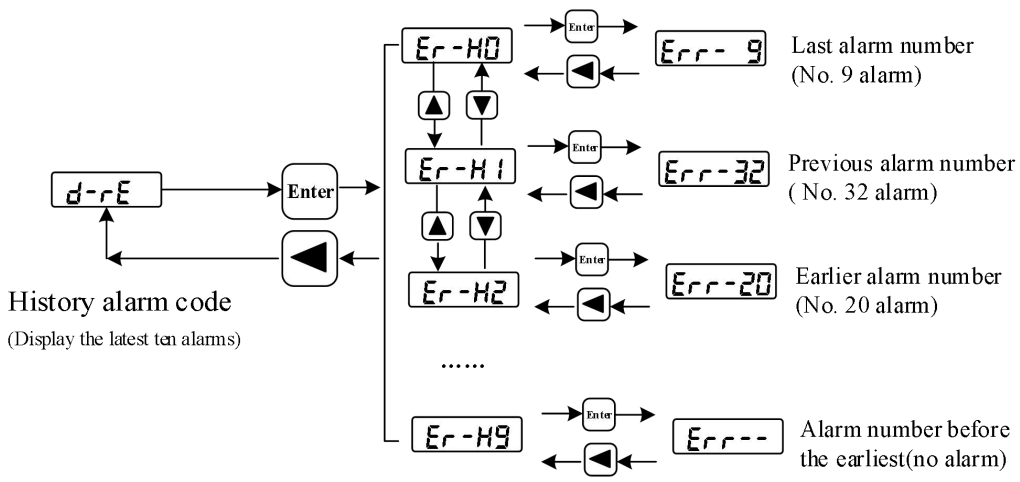

The method for clearing the historical alarm codes is as follows: In the case of no alarm, firstly set the parameter P-119 to 4, and then all the historical alarm codes can be cleared as follow.

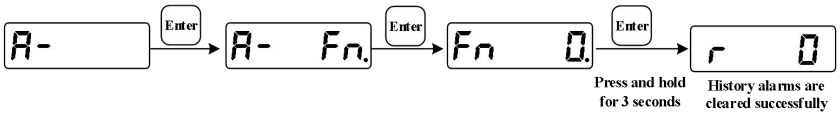

2.4 Parameter settings

The parameters are represented by parameter segment + parameter number. The hundreds digit is the segment number, and the tens and one digits are the parameter number. For example, for parameter P-105, the segment number is "1", the parameter number is "05", and the digital tube display is “P-105”.

Select the parameter setting “P- ” in the main menu, and press the Enter key to enter the parameter setting mode. First, use the ▲ and ▼ keys to select the parameter section. After selecting, press the Enter key to enter the parameter number selection of this section. Next, use the ▲ and ▼ keys to select the parameter number. After selecting, press the Enter key to display the parameter value.

Use the ▲ and ▼ key to modify the parameter value. Press the ▲ and ▼ key once to increase or decrease the parameter by 1. Press and hold the ▲ and ▼ key to continuously increase or decrease the parameter. When the parameter value is modified, the decimal point of the LED digital tube on the far right is lit, press the Enter key to confirm that the modified value is valid, at this time the decimal point of the LED digital tube on the right is off, and the modified value will be immediately reflected in the control (some parameters need to be saved after re-power on for it to work).

After that, you can continue to modify the parameters. After the modification, press the ◀ key to return to the parameter number selection state. If you are not satisfied with the value being modified, do not press the Enter key to confirm, but press the ◀ key to cancel, and the parameter

returns to the original value.

The modified parameters are not saved in the EEPROM. If you need to save them permanently, please use the parameter write operation in the parameter management.

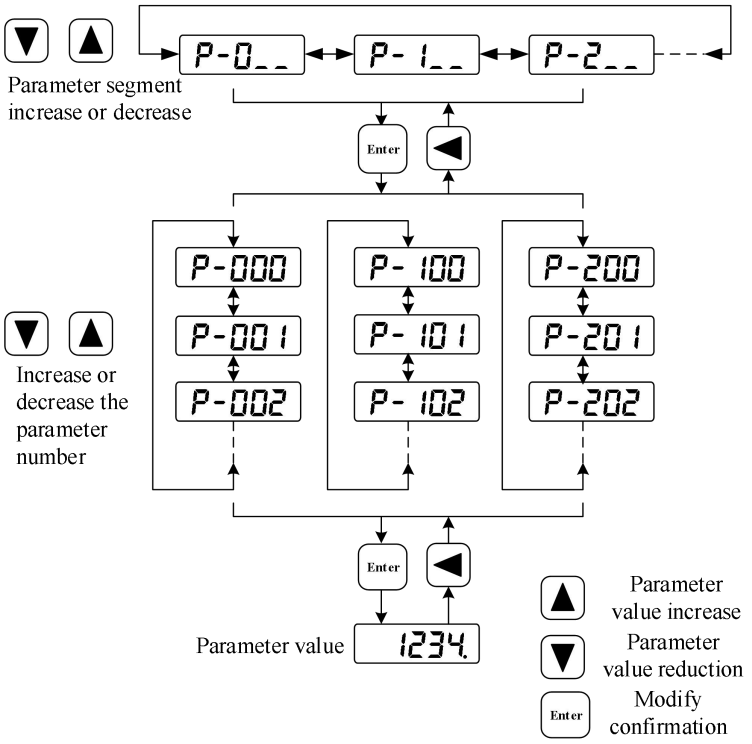

2.5 Parameter management

The parameter management mainly deals with the operation between the parameter table and the EEPROM. Select the parameter management "E- " in the main menu, and press the Enter key to enter the parameter management mode.

There are 3 operation modes can be selected by using the ▲ and ▼ keys. After the selection, press and hold the Enter key for more than 3 seconds to activate the operation. After finishing, press ◀ key to return to the operation mode selection state.

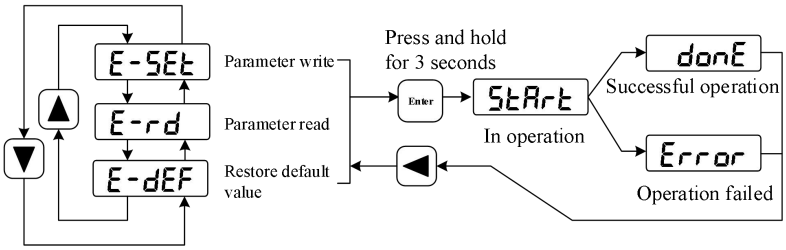

- **Parameter writing**

"E-SEt" indicates that the parameters in the parameter table are written into the EEPROM. When the user modifies the parameter, only the parameter value in the parameter table is changed, and the next time the power is turned on, it will be restored to the original value. If you want to permanently change the parameter value, you need to perform the parameter write operation, write the parameters in the parameter table into the EEPROM, and the modified parameters will be used after power-on.

- **Restore default value**

"E-dEF" indicates that the default values (factory values) of all parameters are read into the parameter table and written into the EEPROM, and the default parameters will be used next time the power is turned on. When the user messes up the parameters and cannot work normally, use this operation to restore all the parameters to the factory state. Because the default values of the parameters corresponding to different driver models and motor models are different, when using the restore default parameters, the correctness of the motor code (parameter P-002) must be ensured firstly.

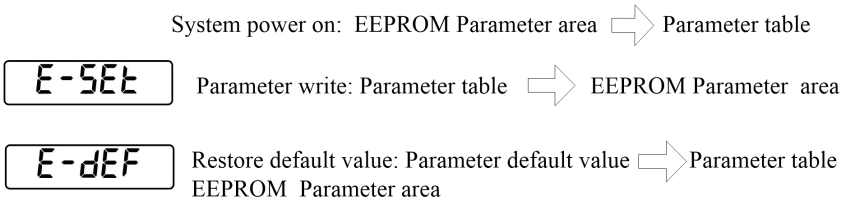

3、Parameter setting and function debugging

- When the driver is first used, <u>it is recommended to conduct no-load test run without connecting the load.</u>（Keyboard speed regulation or JOG running）. Ensure that the driver and motor can work normally after handling and installation, and ensure that the default parameters of the driver for the motor are valid.
- After the driver and motor work normally, without connecting the load, connected CN1 control signal, with the host computer control device for the user needs the position, speed or other working mode of debugging and operation.
- After the signal connection, parameter setting and motor operation have been debugged properly, the load can be connected and start running on load.

3.1 Setting driver Parameters

Turn on the main circuit power supply, the POW indicator of the driver will light up, and the display panel will light up. If an alarm occurs, please check the connection. Set the motor code parameters as follows:

1. Modify the operation password (parameter P-000) to 385 or 316;
2. Modify the motor series (parameter P-099) and motor code (parameter P-002) to the required motor model. The motor model code is showing in chapter 6.2;
3. Enter the parameter management, and execute the operation to restore the default value, as shown in the figure below:

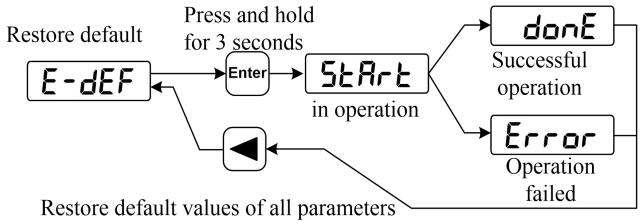

4. Set other functional parameters, execute E-SEt operation to save the parameters, if donE is displayed, the parameters are saved successfully, and other debugging can be performed after restarting the drive;
5. After the drive is powered off and restarted, the trial operation can be performed. The trial operation methods are provided as follows:
   <u>a. Trial operation of keyboard speed regulation (Fn -20);</u>
   <u>b. JOG jog test run;</u>

3.2 Trial run

3.2.1 Keyboard Speed regulation text run

Power on the servo driver, confirm that there is no alarm or any abnormal situation, the operation is shown as following:

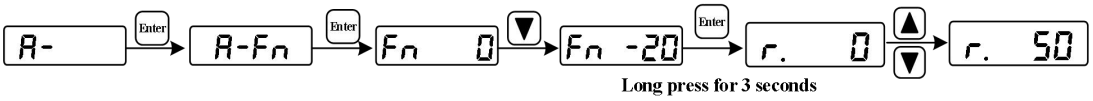

The keyboard speed prompt is" r." , the unit of value is r/min, and the speed command is provided by the key. Use ▲, ▼ key to change the speed command, the motor runs according to the given speed. A positive number indicates a positive command (CCW) and a negative number indicates a reversal (CW). The minimum given speed is 0.1r/min.

After the keyboard speed regulation test run without any abnormality, the mechanical load can be connected, and the next debugging can be carried out under the control instruction of the host computer controller.

3.2.2 Jog spot text run

Switch on the power supply of the main circuit, and the display panel will light up. If there is an alarm, please check the connection.

After confirming that there is no alarm or any abnormal situation, set P-098 to 1, then the servo enable (SON) ON, the RUN indicator light will be ON, the motor will be excited and it has no velocity.

In the auxiliary function, select "A-JoG" and press the Enter key to enter (JOG) operation mode. The jog prompt is "J", the unit of value is r/min, and the speed command is provided by pressing the key:

Press ▲ and keep, the motor runs according to JOG speed (CCW), release the key, the motor stops, keep zero speed; Press ▼ and hold, the motor runs according to JOG speed reversal (CW), release the key, the motor will stop, keep zero speed.

JOG speed is set by parameter P-076, the default speed is 100r/min. If the motor is running normally, it can enter the next operation (joint regulation with the host computer controller).

The meanings of parameters related to the trial run are as follows:

Table 3.1 Key parameters of test running

Parameter	Name	Setting value	Default	Description
P-060	Acceleration time of the speed command	Appropriate numerical	100	Unit: ms 0-1000r/min acceleration time. Increasing this parameter can reduce the acceleration impact
P-061	Deceleration time of the speed command	Appropriate numerical	100	Unit: ms 1000r/min-0 deceleration time. Increasing this parameter can reduce deceleration impact

P-069	Torque limits for trial runs	100~200	100	Unit: Rated torque *1%
P-075	Maximum speed limit	Set as required	3000	Unit: r/min This parameter is used for over speed safety protection
P-076	Speed of JOG	Appropriate numerical	100	Unit: r/min JOG speed
P-098	Force Enable	1 or 0	0	If external enabled, set this parameter to 0；If not, set to 1 and then the motor is excited.

Note: If the motor has abnormal conditions such as vibration and noise, it is necessary to reduce the value of parameter P-005 appropriately during the keyboard speed regulation test run or JOG spot test run.

3.3 Joint debugging with the host computer

The servo driver can be operated in three modes: position mode, speed mode and torque mode.

(1) The position control mode is applied to the system requiring precise positioning. The position command source is pulse command, which is input pulse by PULS+, PULS-, SIGN+ and SIGN- of the input terminal.

(2) Speed control is used in situations where precise speed control is required. It can also form position closed-loop control by cooperating with the upper device;

(3) The output torque of torque control motor is proportional to the input command.

3.3.1 Control parameter setting

After confirming the correct connection of the command port CN1 of the upper computer, keep all input signals OFF, put them into the power supply, and then set the necessary parameters as follows:

(1) Position control mode Set relevant control parameters according to the following table:

Table 3.2 Setting key parameters of the position control mode

Parameter	Name	Setting value	Description
P-004	Control mode	0(default value)	Set to position control mode
P-028	Position command electronic gear molecule (high bits)	0(default value)	Molecule of electronic gear = P-028*10000 + P-029
P-029	Position command electronic gear molecule (low bits)	1(default value)	
P-030	Position command electronic gear denominator	1(default value)	Denominator of electronic gear

P-035	Pulse input mode	0 (default value)	0: Pulse + Direction 1: Forward/Reverse pulse 2: A/B orthogonal pulse
P-036	Pulse input direction	0 (default value)	0: Normal direction 1: Reverse
P-005	Velocity loop proportional gain	50 (default value)	To increase the rigidity or reduce the tracking error, P-005/ P-009 can be appropriately increased by 10 for each adjustment
P-006	Velocity loop integration time constant	20 (default value)	
P-009	Position loop proportional gain	40 (default value)	
P-007	Torque filter time constant	25 (default value)	When vibration or noise is generated by motor operation, it can be adjusted appropriately, and the amount of each adjustment is 10
P-019	Speed detection filter time constant	40 (default value)	
P-021	Position loop feed forward gain	0 (default value)	Scope: 0 ~ 128
P-022	Position loop feed forward filtering time	10 (default value)	Unit: 1ms range: 2 ~1000
P-040	Position command smoothing filter time	0 (default value)	Unit: 1ms range: 0 ~1000
P-080	Position out of tolerance detection range	600 (default value)	Unit: 0.01 laps

（2）Speed control mode Set related control parameters according to the following table:

Table 3.3 Setting key parameters of the speed control mode

Parameter	Name	Setting value	Description
P-004	The control mode	1	Set it to speed control mode
P-025	Source of speed command	0 (default value)	0: Analog amount, input analog voltage by port AS+ and GNDA; 1: Internal multistage velocities < 8 optional：P137~P144>; 2: Analog amount + Multiple velocities inside 3: Pulse speed
P-046	Analog speed	300	1V analog amount of voltage

	command gain	(default value) Set as needed	corresponding to speed (unit: r/min/V)
P-047	Analog speed command zero offset compensation	0 (default value) Set as needed	Unit: 0.1 mv
P-048	Speed command direction	0 (default value) Set as needed	0: Normal direction 1: Reverse
P-051	Analog speed command dead zone 1 (positive)	0 (default value) Set as needed	Set the forward voltage dead zone: 0~13000 (unit mv)
P-052	Analog speed command dead zone 2 (negative)	0 (default value) Set as needed	Set the negative voltage dead zone: -13000 ~ 0 (unit mv)
P-060	The speed command accelerates the time	100 (default value) Set as needed	0~1000r/min acceleration time (unit: ms)
P-061	Speed command deceleration time	100 (default value) Set as needed	1000~0r/min acceleration time (unit: ms)
P-005	Velocity loop proportional gain	50 (default value)	To increase the rigidity, P-005 can be appropriately increased by 10 for each adjustment
P-006	Velocity loop integration time constant	20 (default value)	If the load inertia is large, P-006 can be appropriately increased by 10 for each adjustment
P-007	Torque filter time constant	25 (default value)	When vibration or noise is generated by motor operation, it can be appropriately increased by 10 for each adjustment
P-019	Speed detection filter time constant	40 (default value)	

(3) Torque control mode, set relevant control parameters according to the following table:

Table 3.4 Key parameter Settings of torque control mode

parameter	Name	Set the value	Description
P-004	Control mode	2	Set to torque control mode
P-026	Source of torque instruction	0 (default value)	0: Analog torque 1: Internal multistage torque <4 optional：P145~P148>
P-053	Analog torque command gain	30 (default value) Set as needed	1V analog voltage corresponding to the percentage of the rated torque of the motor (unit:1%/V)
P-054	Analog torque	0 (default value)	Unit: 0.1mv

	command zero offset compensation	Set as needed	
P-055	Analog torque command direction	0 (default value) Set as needed	0:Normal direction 1: Reverse
P-075	Maximum speed limit	Set as needed	Set the over-speed protection value(Unit: r/min)
P-078	Speed limit for torque control	1000(default value) Set as needed	The speed of torque mode motor is limited within this parameter: 0~8000(Unit: r/min)

After the above operations and settings are completed, be sure to perform the parameter save operation E-SEt as shown in the following figure. Power off after the operation succeeds. After the driver panel is off, power on again, and then the next function debugging can be carried out.

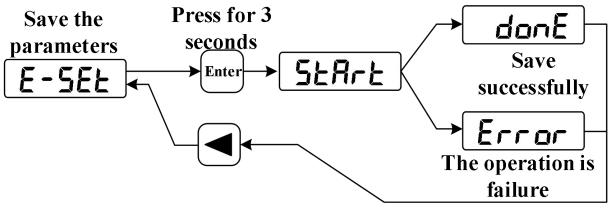

3.3.2 Function debugging

1、After setting the preceding parameters, perform parameter writing as required (refer to E-SET operation instructions in Parameter Management in Section 2.5). After the parameters are saved, power off the servo driver and restart it.

2、Speed control mode: given a small analog voltage command, and make the servo enable input signal SON ON, the motor should run according to the command. At this time, the "Enable" indicator decimal point ON the panel will light up. Whether the motor is running normally can be judged by monitoring the following variables:

(1) By monitoring d-1 ,observe the size of the motor current(unit: A). When the motor runs at normal steady speed, the displayed current value will not exceed the rated current of the motor;

(2) By monitoring d-CS, observe the analog quantity command (expressed in rotational speed, unit: r/min), and the displayed value in normal case is equal to the rotational speed displayed by d-SPd;

(3) By monitoring the rE-10 in the d-rE menu, observe the original the analog quantity command (expressed in voltage, unit: mv). Normally, the display value is equal to the command voltage value given by the host computer. (Note: rE-9 is the command after zero offset compensation, unit: mv)

3、After confirming that it is normal, slowly increase the analog voltage command to gradually increase the speed of the motor, while monitoring whether there is vibration and noise, whether the speed is stable, and whether the motor current exceeds the rated value.

4、When the motor is running properly from zero speed to a positive maximum speed, or from zero speed to a negative maximum speed, the user can debug other functions.

During the operation of the analog command speed mode, common anomalies and handling methods are as follows:

Number	Problem	Solution
1	After the analog instruction is given, the data displayed in the monitor window rE-3 does not correspond to the instruction voltage	Check whether the command system and command cable connection of the host computer are correct.
2	After it is enabled, the monitoring window RE-10 has the corresponding command voltage value, while D-[S does not have the corresponding command speed, that is, the motor does not run with the voltage command	1. Check the setting of "Necessary parameters"; 2. Check the input I/O signal line. It is convenient to check I/O by observing the contents displayed in d-di (check the description of input terminal Di in Section 2.3).
3	The positive direction of motor rotation is inconsistent with the requirements of the host computer	Modify parameter P-048 and set whether the speed command is reversed: set it to 0, no reverse; set it to 1, reverse (effective immediately).
4	Vibration, noise and other abnormal conditions of the motor;	1. Check whether the shielding wire is correctly connected; 2. Check chapter 4 for Performance Tuning.
5	When given 0V command, the motor will move slightly	Perform automatic zeroing of analog quantity or manually adjust parameter P-047.

5、Position control mode: make the servo enable input signal SON valid, given a lower frequency position pulse command, the motor should run:

（**1**）By monitoring d-i ,observe the size of the motor current(unit: A). Under normal no-load steady speed operation, the displayed current value should be a small current value close to 0;

（2）By monitoring d-Frq, the frequency of command pulse can be displayed in real time. If the pulse is inaccurate, the pulse filter coefficient P-038 can be set accordingly.

（3）By monitoring d-Cod, press the Enter key to display the encoder bit number, and then press the ▲ or ▼ key to display the real-time level state of the input pulse signal;

（4）After the servo driver executes a section of instruction, it can read the pulse number issued by

the host computer by monitoring d-CPn;

6、 Slowly increase the speed of the position command, gradually increase the motor running speed, while monitoring whether there is vibration and noise, whether the speed is stable, and whether the motor current exceeds the rated value.

7、 When the motor can follow the command within the rated speed, and the position following error displayed by d-EPo is 0 when it stops, the user can debug other functions.

During the operation of position control mode, common anomalies and handling methods are as follows:

Number	Problem	Solution
1	After enabling, Given position pulse command, d-CPo shows no change, motor does not run	Check whether the command system and command cable connection of the host computer are correct
2	d-CPo display has changed, motor does not run	1. Check the setting of "Necessary parameters"; 2. Check the input I/O signal line. It is convenient to check I/O by observing the contents displayed in d-di (check the description of input terminal DI in Section 2.3).
3	The positive direction of motor rotation is inconsistent with the requirements of the upper computer	Modify parameter P-036, and set whether the position command is reversed: set it to 0, no reverse; set it to 1, reverse (effective immediately)
4	Vibration, noise and other abnormal conditions of the motor;	1. Check whether the shielding wire is correctly connected; 2. Check chapter 4 for Performance Tuning.
5	The motor can only run in one direction	1. Pay attention to the mode of the detection command source and check the setting of P-035/P-037; 2. Check whether the position command input cable is connected properly.
6	The pulse number of position instruction displayed in the d-CPo is inconsistent with that of the instruction source of the upper computer	1. Check the shielding treatment of the instruction signal line; 2. Stay away from strong interference sources.

3.4 Use of electromagnetic brake (holding brake output) function

The electromagnetic brake (hold brake, power off brake) is used to lock the vertical or tilt table connected with the motor to prevent the table from falling after the servo power is lost. To achieve

this function, you need to buy a motor with brakes (lock). Brakes should only be used to hold the table and should never be used to slow down or stop the machine.

(1) Related parameters of the electromagnetic brake:

Parameter	Name	Parameters	Default value	Unit	Apply
P-165	Motor static speed detection point	0～1000	5	r/min	ALL
P-166	Delay time of electromagnetic brake when motor is stationary	0～2000	300	ms	ALL
P-167	Waiting time of electromagnetic brake when motor is running	0～2000	500	ms	ALL
P-168	Speed of electromagnetic brake when motor is running	0～3000	100	r/min	ALL
P-169	Electromagnetic brake release delay time	0～3000	500	ms	ALL

（2）Use of electromagnetic brake:

The following figure is the brake wiring diagram. The brake release signal BRK of the driver is connected to the relay coil, and the relay contact is connected to the brake power supply. The power supply of the brake is provided by the user and has sufficient capacity. It is recommended to install a surge absorber to suppress the surge voltage caused by the relay on/off action. Diodes can also be used as surge absorbers, be careful to cause a little brake delay.

After the motor stops stationary (the speed is less than P-165) servo OFF, then the motor continues to power to maintain the position, the brake from release to brake, stable for a period of time (the time is determined by the parameter P-166), the motor power supply is removed.

The motor is in operation (speed is greater than P-165) servo OFF, at this time the motor current is cut off, the brake continues to show the release state, delay a period of time, the brake brake. This is to slow down the motor from high speed rotation to low speed, and then make the mechanical brake action, to avoid damage to the brake. The delay time is the time required for parameter P-167 or motor speed deceleration to the speed of parameter P-168, and the minimum value of the two is taken.

P-169: Define the delay time between motor current switching ON and electromagnetic brake release (DO output terminal BRK ON) when the system changes from unenabled state to enabled state.

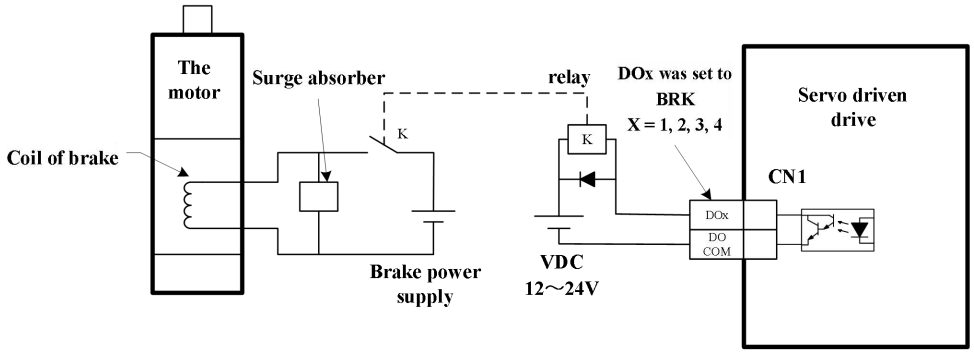

3.5 Programmable digital input and output ports

All the digital input and output ports DI/DO of the drive are software programmable and can be modified by customers according to their needs. The specific usage is as follows:

Parameter	Name	Parameters	Default value	Unit	Apply
P-100	Digital input DI1 function	-21～21	1		ALL
P-101	Digital input DI2 function	-21～21	2		ALL
P-102	Digital input DI3 function	-21～21	3		ALL
P-103	Digital input DI4 function	-21～21	4		ALL
P-104	Digital input DI5 function	-21～21	20		ALL
P-105	Digital input DI6 function	-21～21	21		ALL

- Digital input DIx function planning, absolute value of parameter indicates function, symbol indicates logic.
- symbols denote input logic, positive numbers denote positive logic, negative numbers denote negative logic, ON is valid, OFF is invalid:

Parameter	DI input signal	DI results
A positive number	Open circuit	OFF
	Conduction	ON
A negative number	Open circuit	ON
	Conduction	OFF

- When multiple input channels function identically, the function result is logical or relational. For example, if P-100 and P-101 are both set to 1(SON function), the SON function takes effect when DI1 or DI2 is ON.

Parameter	Name	Parameters	Default value
P-108	Digital output DO1 function	-12～12	2
P-109	Digital output DO2 function	-12～12	3
P-110	Digital output DO3 function	-12～12	5
P-111	Digital output DO4 function	-12～12	8

- The digital output DO1 function plan, the absolute value of the parameter indicates the function, and the symbol indicates the logic.

- 0 forces OFF, 1 forces ON. Positive numbers represent positive logic and negative numbers represent negative logic:

Parameter	Corresponding function	DO output signal
A positive number	ON	Conduction
	OFF	Cut-off
A negative number	ON	Cut-off
	OFF	Conduction

（1）DI Function list

Number	Symbol	DI function	Number	Symbol	DI function
0	NULL	No function	14	TRQ2	Internal torque selection 2
1	SON	Servo enable	15	EMG	Emergency stop
2	ACLR	Alarm clearance	16	CMODE	Switching control mode
3	CCWL	Forward drive disable	17	GAIN	Switching of gain
4	CWL	Reverse drive disable	18	GEAR1	Electronic gear selection 1
5	TCCW	Positive torque limit	19	GEAR2	Electronic gear selection 2
6	TCW	Inverse torque limit	20	CLE	Position deviation clearance
7	ZCLAMP	Zero speed clamp	21	INH	Pulse input rejection
8	CZERO	Zero command (Stop)			
9	CINV	Command reverse	23	CCW	Forward turn allowed (Start)
10	SP1	Internal speed selection 1	24	CW	Reverse run
11	SP2	Internal speed selection 2			
12	SP3	Internal speed selection 3			
13	TRQ1	Internal torque selection 1			

（2）DO Function list

Number	Symbol	DO function	Number	Symbol	DO function
0	OFF	Always invalid	8	BRK	Output control of electromagnetic brake
1	ON	Always effective	9	RUN	Servo in operation
2	RDY	Servo ready	10	NEAR	Position closed
3	ALM	Alarm	11	TRQL	torque limited

4	ZSP	Zero velocity	12	SPL	Speed limited
5	COIN	Position completed	14	PtoS	Position/Speed mode switch complete
6	ASP	Speed arrive	15	PtoT	Position/torque mode switch complete
7	ATRQ	Torque arrive	16	StoT	Speed/torque mode switch complete
			20	**DO3_Z OUT**	**Return to zero Z signal output (only DO3 supports this function)**

4、Performance optimization and Adjustment

4.1 Control loop gain parameters

The gain parameters of position mode and speed mode are as follows:

Parameter	Name	Defaul t value	Unit	Specification
P-005	Velocity loop gain	50	Hz	To improve the servo rigidity, the value of this parameter should be increased, but too large value may cause vibration and noise. The amount of each adjustment is 10.
P-006	Velocity loop integration time	20	ms	If the load inertia is larger, the value of this parameter should be appropriately increased, but if it is too large, the rigidity of the speed response will be reduced. The amount of each adjustment is 5.
P-009	Position loop gain	40	1/s	To improve the servo rigidity and reduce the following error, the value of this parameter should be increased, but too large will easily cause vibration and noise. The amount of each adjustment is 10
P-007	Torque filtering time	25	0.1ms	In order to eliminate the vibration and noise of the motor during operation, these two parameters should be increased appropriately. In the case of no obvious vibration and noise, the smaller the parameter value, the better. The amount of each adjustment is 10. P019 should be increased priority, and then P007 should be considered when the noise and vibration cannot be completely eliminated
P-019	Speed detection filtering time	40	0.1ms	

Note: To improve servo rigidity and dynamic performance, P-005 and P-009 should be set as large as possible, and the amount of each adjustment is 10. In general, the greater the mechanical shaft rigidity, the greater the adjustable value of P-005 and P-009. The servo shaft can be kept in the state of zero speed feed and gradually increase these two parameters. Observe the low LO of the display item d-EPo (position following error) (press the Enter key to display the value). The normal range of this value should be within plus or minus 20, and if the amplitude of the display value becomes significantly larger, it means that the servo shaft rigidity is too strong. P-005 and P-009 can be reduced appropriately, and then the value of the gain parameter will be better. If there is obvious vibration or noise in the process of increasing P-005 and P-009, increase P-007

appropriately by 5 each time, and then observe whether the noise decreases. The value of this parameter should not be too large (generally less than 40).

4.2 Performance optimization

① Gain parameter adjustment steps:

The choice of bandwidth for position and speed must be determined by mechanical rigidity and application, the conveyor machinery connected by the belt has low rigidity and can be set to a lower frequency width (P-009:10~40).; The mechanical stiffness of the gearbox driven by the reducer is medium, and the frequency width can be set to medium (P-009:30~50); The stiffness of the direct drive lead screw is high and can be set for high bandwidth (P-009:>50). If the mechanical properties are unknown, increase the gain gradually to increase the bandwidth until resonance, and then lower the gain.

In servo gain, if one parameter is changed, the other parameters also need to be adjusted. Do not make large changes to only one parameter. In general, please follow the following principles when changing the servo parameters:

Improve response	Reduces response, inhibits vibration and overshoot
1. Increase the speed loop gain Kv (P-005),the amount of each adjustment is 10; 2. Reduce the speed loop integration time constant Ti (P-006), the amount of each adjustment is 5; 3. Increase the position loop gain Kp (P-009), the amount of each adjustment is 10.	1. Reduce the position loop gain Kp (P-009), the amount of each adjustment is 10; 2. Increase the speed loop integration time constant Ti (P-006), the amount of each adjustment is 5; 3. Reduce the speed loop gain Kv (P-005), the amount of each adjustment is 10.

② Noise and resonance suppression method:

If the gain cannot be increased due to the resonance of the mechanical system, and the desired responsiveness cannot be obtained, the speed detection filtering time can be appropriately increased first (P-019 each adjustment amount is 10), if there is no obvious effect, then the torque low-pass filtering time can be appropriately increased (P-007 each adjustment amount is 10) to suppress the resonance.

5、Debug problems and processing method

5.1 Alarm Code

Alarm code	Alarm name	Alarm content	Alarm clear
Err--	no alarm	works fine	
Err 1	overspeed	Motor speed exceeds maximum limit	Yes
Err 2	Power main circuit overvoltage	The main circuit power supply voltage exceeds the specified value, check whether the braking resistor is damaged or the resistance value is appropriate	No
Err 3	Power main circuit undervoltage	The main circuit power supply voltage is lower than the specified value	No
Err 4	Position tracking deviation error	The position tracking deviation exceeds the set value (P-080).	Yes
Err 5	position command frequency error	The position command frequency exceeds the maximum allowable frequency	Yes
Err 6	Motor stall	The motor power line is connected incorrectly, and the number of pole pairs P-201 is incorrect	Yes
Err 7	Drive forbidden exception	CCWL, CWL driver stroke limit switch signal abnormal	Yes
Err 9	Incremental encoder ABZ signal failure	The encoder ABZ signal is disturbed or disconnected	Yes
Err10	Incremental encoder UVW signal failure	There is interference or disconnection in the UVW signal of the encoder	Yes
Err11	IPM module failure	The power main circuit IPM inverter module is faulty	No
Err12	Overcurrent	The instantaneous current of the servo drive is too large	Yes
Err13	overload	The average load current of the motor is too high	Yes
Err14	Braking peak power overload	If the instantaneous load is too large for a short time during braking, check whether the braking resistor is damaged or whether the resistance value is appropriate.	Yes
Err20	EEPROM error	EEPROM read and write errors or unexpected power failure when saving parameters	No
Err21	logic circuit error	Processor peripheral logic circuit failure	No
Err23	AD conversion reference voltage error	AD sampling circuit voltage reference is not a standard value	No

Err24	A/D conversion channel asymmetry or zero drift	AD Sampling Amplification Conditioning Circuit Abnormal	No
Err29	User torque overload alarm	The motor load exceeds the value and duration set by the user	Yes
Err30	Encoder Z signal lost	Encoder Z signal does not appear	No
Err31	The encoder Z signal is detected abnormally	The encoder Z signal is disturbed or the signal is unstable	No
Err32	The encoder UVW signal is illegally encoded	Encoder UVW signal disconnection	No
Err33	Wire-saving encoder signal error	No high-impedance state during power-up sequence	No
Err36	Second encoder disconnection	The second encoder is disconnected or there is interference	No

5.2 Alarm Cleanup method

When a fault alarm occurs in the servo drive, after the cause of the fault is eliminated, the alarm can be cleared through the driver operation panel under the condition of continuous power supply. The specific operation methods are as follows:

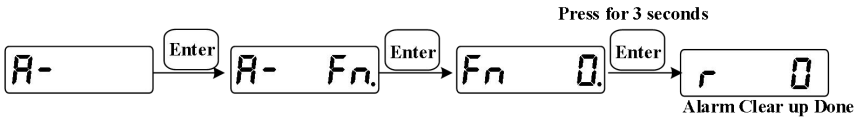

Note: Some hardware fault alarms cannot be cleared, please consult customer service staff for details.

5.3 Frequently debug problems and countermeasures

① An error occurred when restoring default parameters

a. Confirm whether the operation password (P-000) is set correctly;

b. The default operation must be restored when the drive is disabled.

② If the upper computer is enabled, the green light of the drive (Run) is off

a, check the power supply R/S/T voltage is low;

b. Check whether the +24V input of the CN1 interface is correct;

c. Check whether the SON signal on the CN1 interface is connected to 0V;

d. Through the above measures, if the green light of (Run) is still not on, use the internal enable (P098 set to 1) to try again.

③ The drive has an Err-9/Err-15/Err-30/Err-31/Err-32/Err-33” alarm

Note: The photoelectric encoder at the end of the servo motor is a typical fragile component, which needs special protection!

a. The above alarm indicates that there is a problem with the encoder or the encoder

connection cable;

b, check whether the shielding layer is well grounded at both ends, whether the plug has water or impurities;

c, whether the connection line is too long to the encoder power supply 5V attenuation;

d, confirm whether it is a interference problem, whether there is a strong magnetic and strong electric line next to it, if so, isolation as far as possible.

④ Noise or vibration during servo motor operation (high frequency)

a. Appropriately increase the filtering coefficients P-007 and P-019, each adjustment amount is 5;

b. If the effect of increasing the filter coefficient is not obvious, it is necessary to reduce the proportional gain of the velocity loop and the proportional gain of the position loop, that is, to reduce P-005 and P-009, and the adjustment amount is 5 each time;

c, if the above measures are not significantly improved, please check whether there is interference in the encoder connection line, check whether the shield layer is well grounded at both ends.

⑤、Jitter in servo motor operation (low frequency)

a. Determine whether the load and inertia of the servo motor are within the allowable range of the motor, if the load and inertia exceed the rated multiple of the motor too much (load torque is greater than 3 times, inertia is greater than 5 times), please re-select the motor with larger specifications;

b, appropriately increase the proportional gain of the speed loop P-005, each adjustment amount is 5;

c, if the effect of increasing P-005 is not obvious, the filter coefficient P-007/P-019 can be appropriately reduced, each adjustment amount is 5;

d, if the effect of reducing the filter coefficient is not obvious, the position loop gain P-009 can be adjusted appropriately, and the adjustment amount is 5 each time;

e. If the above measures are not significantly improved, please check whether there is interference between the encoder connection line and the instruction connection line, and check whether the shield layer is well grounded at both ends.

⑥ The drive has an Err 2 or Err 11 alarm

Determine whether the driver is powered on when the alarm or large inertia frequent acceleration and deceleration alarm:

a、If it causes an alarm when it is powered on, it can be determined that the hardware circuit of the driver is faulty;

b、In case of frequent acceleration and deceleration with large inertia, check the monitoring menu d-, and d-P, first to observe whether the instantaneous value and maximum value

of the current exceed the allowable range of the driver and motor. If so, reduce the inertial acceleration accordingly (speed mode: increase the acceleration time P-060 and deceleration time P-061; Position mode: increase the acceleration and deceleration time of the upper computer controller), make the current control within the allowable range of the drive and motor, and check whether the fault disappears.

⑦ "Err 5/Err 12" appears in drive when servo motor is started

a、The occurrence of "Err 5" indicates that the upper computer sends out pulse commands too quickly, which is beyond the response capacity of the servo motor. It is suggested to increase the acceleration and deceleration time of the upper computer, or appropriately increase the smoothing time of position instruction P-040, and the amount of each adjustment is 10;

b、 If the above measures are invalid or the upper computer cannot be modified, please set P-116 to 32 to shield "Err 5" alarm (to take effect after power failure and restart);

c、 If an Err 12 over-current alarm occurs during startup, it indicates that the motor is overloaded during startup. Please check whether the driver selection is small or the driver is damaged.

⑧ "Err-4" appears in drive during servo motor operation

a、If the low-speed operation is normal, but "Err 4" appears during the high-speed operation, please first check whether the maximum speed limit of P-075 is low, and then properly increase the position ring gain P-009 (the amount of each adjustment is 5), or properly increase the detection range of position following error P-080;

b、If at any speed, as long as the position command is given, the motor will run on "Err 4", please determine whether the motor is blocked or damaged, whether the driver strong circuit is damaged;

c、If at any speed, as long as the position instruction, "Err 4" always appears when the motor is running, please determine whether the motor is blocked or damaged, or whether the driver strong circuit is damaged;

d、 If "Err 4" appears occasionally during operation, check whether there is interference between the encoder connection line and the command connection line, and check whether both ends of the shield layer are well grounded.

⑨、 The drive is running normally, but the host computer has "excessive position following error"

a、Determine the detection threshold of the position tracking error of the upper computer, set the driver position error detection range P-080 to a value smaller than the threshold, and observe whether "Err 4" is displayed during the drive running.;

b、If the driver appears "Err 4", It indicates that there is a problem with the response of the drive and motor, please make sure the driver and motor are intact first， and then

increase the position ring and speed ring gain P-009/P-005;

c、 If the above measures have no obvious effect, Larger size drives and motors can be considered for replacement.

6、Drive specifications and motor adapter table

6.1 Model Specifications and Performance parameters

Table 6.1 Drive Model specifications

Model		T3G-L20	T3G-L30					
Power Supply	Main power	Single phase/Three phase 220VAC -15%+10% 50/60Hz						
Environment	Temperature	Work：0℃ ~ 40℃ Storage：-40℃ ~ 50℃						
	Humidity	Work：40% ~ 80%(no condensation) Storage：93% or less (no condensation)						
	Atmospheric pressure	86kPa ~ 106 kPa						
Protection class		IP20						
control mode		position, speed, torque, position/speed, speed/torque, position/torque						
digital input		5 programmable input terminals (optical isolation)						
digital output		3 programmable output terminals (optical isolation)						
Encoder Signal output	signal type	A, B, Z differential output, Z signal open collector output						
Position	Input frequency	Differential input: ≤500kHz (kpps); Single-ended input: ≤200kHz (kpps)						
	Command mode	Pulse + Direction; Forward/Reverse Pulse; Quadrature Pulse						
	Electronic gear ratio	1 ~ 32767/1 ~ 32767						
Speed	Simulation command enter	±10VDC, input impedance 10kΩ						
	Instruction plus slow down	Parameter setting P-060/P-061						
	Command source	Analog, internal speed command						
Torque	Monitoring function	-10V ~ +10V, input impedance 10kΩ						
	Torque limit	Parameter setting P-065/P-066						
	Command source	Analog, internal torque command						
Monitoring function		Speed, current position, position deviation, motor torque, motor current, command pulse frequency, etc.						
Protective function		Overspeed, overvoltage, overcurrent, overload, abnormal braking, abnormal encoder, position out of tolerance, command overclocking, etc.						
Feature	Speed Bandwidth	≥800Hz						
	speed volatility	< ±0.03% (load 0 ~ 100%); < ±0.02% (power -15% ~ +10%)						

6.2 Standard 4 pole pairs motor table（220V）

Table6.2 T3G-L20/L30 driver compatible motor model
(Motor series code P-099: F1-MG)

Motor Code （P-002）	Adapter drive Model Specifications (AC 220V)	Servo motor model (220V)	Rated Power （kW）	Rated Current （A）	Rated Torque （Nm）	overload multiple
20	T3G-L20	40ST-M00130	0.05	0.61	0.16	3
20		40ST-M00330	0.1	0.9	0.32	3
21		60ST-M00630	0.2	1.2	0.6	3
22		60ST-M01330	0.4	2.8	1.3	3
23		60ST-M01930	0.6	3.5	1.9	3
27		80ST-M01330	0.4	2.0	1.3	3
28		80ST-M02430	0.75	3.0	2.4	2.5
29		80ST-M03520	0.73	3.0	3.5	2.5
30		80ST-M04025	1.0	4.4	4	2.5
31		90ST-M02430	0.75	3	2.4	3
32		90ST-M03520	0.73	3	3.5	3
33		90ST-M04025	1.0	4	4	2.5
34	**T3G-L20/L30**	110ST-M02030	0.6	2.5	2	2.5/3
35	**T3G-L20/L30**	110ST-M04030	1.2	5	4	2/3
39	**T3G-L20/L30**	110ST-M04020	0.8	3.5	4	3/3
36	**T3G-L30**	110ST-M05030	1.5	6	5	2.5
37	**T3G-L30**	110ST-M06020	1.2	4.5	6	3
38	**T3G-L30**	110ST-M06030	1.8	6	6	2.5
44	**T3G-L20/L30**	130ST-M04025	1	4	4	2.5/3
45	**T3G-L20/L30**	130ST-M05025	1.3	5	5	2/3
46	**T3G-L30**	130ST-M06025	1.5	6	6	2.5
41	**T3G-L30**	130ST-M06030	1.8	7	6	2.2
47	**T3G-L30**	130ST-M07720	1.6	6	7.7	2.5
47	**T3G-L30**	130ST-M07725	2.0	7.5	7.7	2
48	**T3G-L30**	130ST-M07730	2.4	9	7.7	1.6/2
40	**T3G-L20/L30**	130ST-M10010	1.0	4.5	10	2.2/3
49	**T3G-L30**	130ST-M10015	1.5	6	10	2.5
43	**T3G-L30**	130ST-M10020	2	8.5	10	1.7
50	**T3G-L30**	130ST-M10025	2.6	10	10	1.5
51	**T3G-L30**	130ST-M15025	3.8	13.5	15	1.3
52	**T3G-L30**	130ST-M15015	2.3	9.5	15	1.6